OMRON

Connector-Terminal Block Conversion Unites

XW2R Series

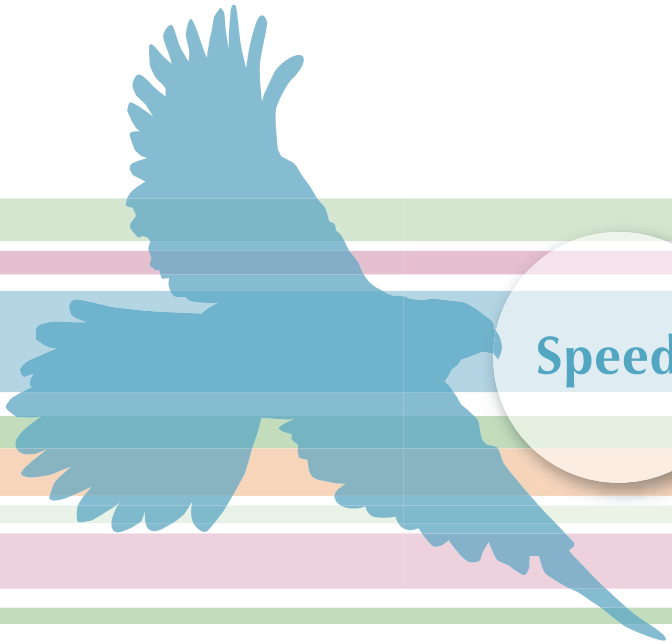

Speedy

Get Waste-free Connections in the Ideal Style

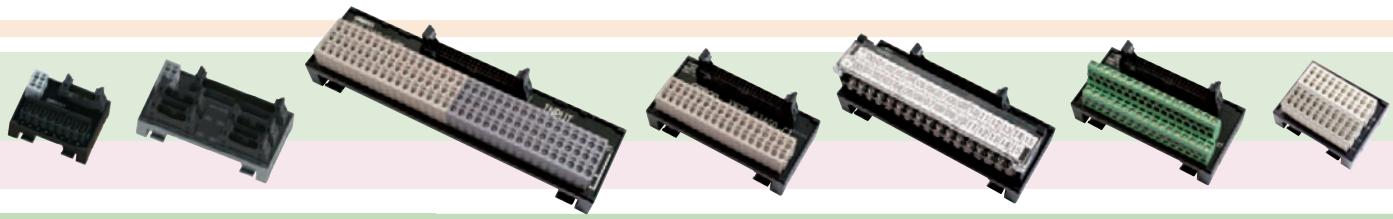

Excellent

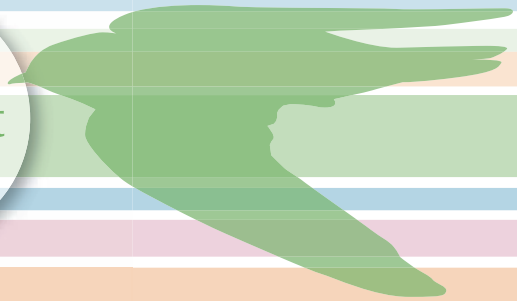

Universal

Select from 3 Different Styles

Select from Three Styles of Units for a Dramatic

Are You Wasting Work, Time, and Space Connecting to

FALCON

隼

Speedy

Extreme Savings in Wiring

Power supply terminals help you dramatically save work in wiring with only one terminal block.

Units with Power Supply Terminals for PLCs

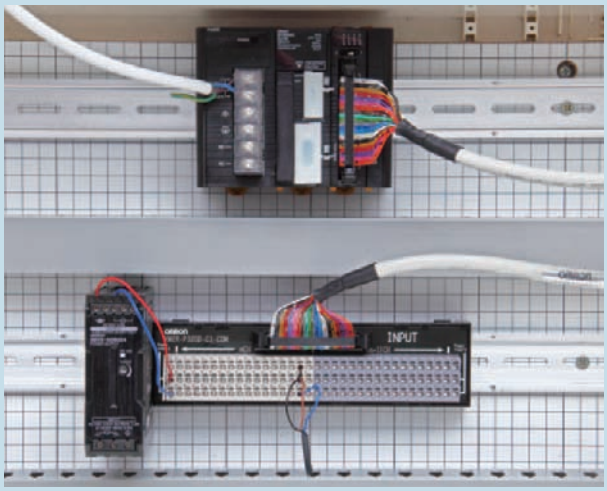

SWALLOW

燕

Excellent

Extremely Easy to Connect

A wiring pattern that is specialized for PLCs reduces work and mistakes in checking signal layouts.

Units for PLCs + Common Terminal Block

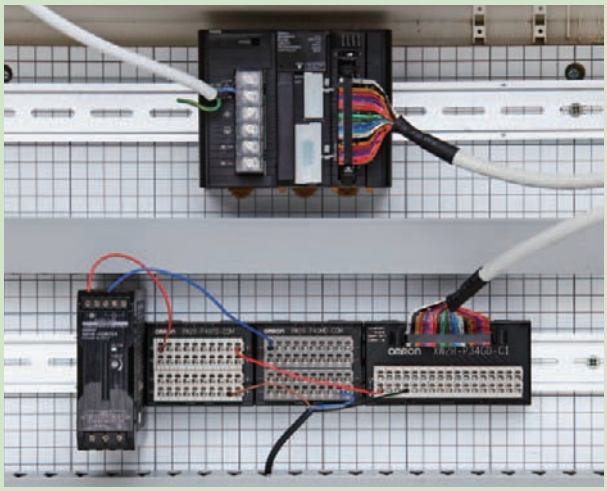

PIGEON

鳩

Universal

Outstanding Adaptability

Adaptability means you can handle all types of applications, helping to reduce the number of stocked parts.

Units for General-purpose Devices

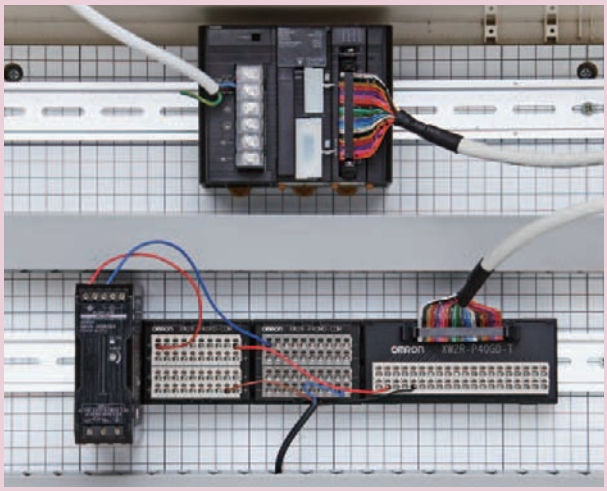

Savings in Wiring and Wiring Work

Connector-Terminal Block Conversion Units?

Total Length	Superior (186.7mm)
Connection Work	Superior (8 min, 56 s)
Features	Specialized for connecting PLCs; power terminals provided.
Flexibility	Reasonable
Details	Page 4

Total Length	Good (227.3mm)
Connection Work	Good (9 min, 14 s)
Features	Specialized for connecting PLCs.
Flexibility	Reasonable
Details	Page 5

Total Length	Reasonable (242.3mm)
Connection Work	Reasonable (12 min, 26 s)
Features	Wire connectors and terminal blocks connected 1:1.
Flexibility	Superior
Details	Page 5

*Results of OMRON comparison for 32 I/O points.

INDEX

Speedy Extreme Savings in Wiring

Dramatically reduce wiring and wiring work. Increase work standardization.
Ideal for connecting to PLCs from just about any company.

Type: **Units with Power Supply Terminals for PLCs**

Wiring method: **Push-in spring** | **e-CON**

Connector-Terminal Block Conversion Units with Power Supply Terminals

XW2R-□□□GD-□□-COM

XW2R-N□□GD-C□-COM

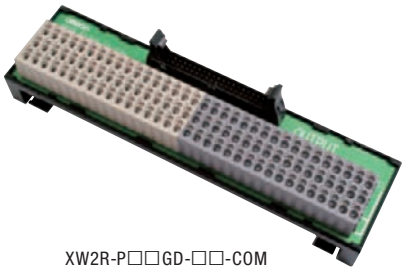

XW2R-P□□GD-□□-COM

XW2R-P□□GD-□□-COM

- The Units for inputs and outputs are different colors for easy recognition.
- Units available for OMRON, Mitsubishi, and Keyence PLCs.
- A wiring pattern that is specialized for PLCs reduces work in checking signal layouts.
- PLC addresses are provided on the terminal blocks.
- Connector pins not used for PLCs were eliminated to minimize the number of pins and thereby reduce the size.

The signal, positive(+) voltage, and negative(–) voltage lines can be wired together to save space and work.

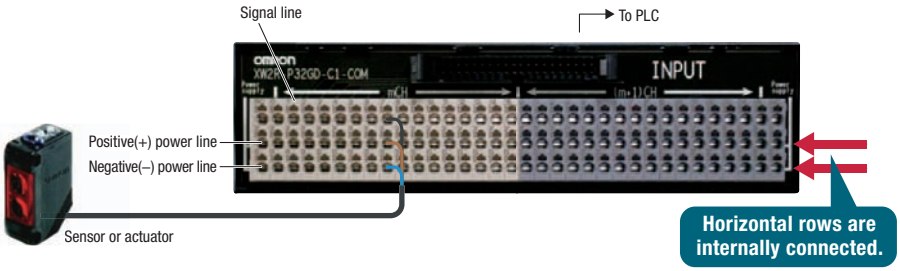

Are You Wasting Time Removing Sheaths from Sensor Cables?

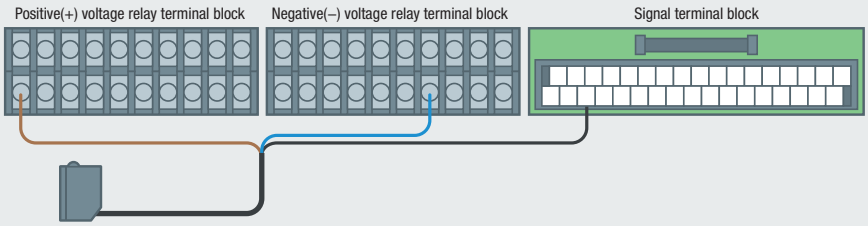

Using a Conversion Unit with Power Supply Terminals

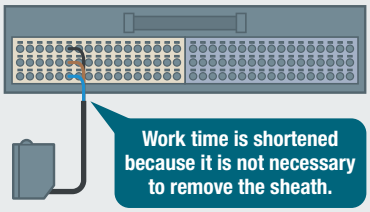

Footprint Reduced by 53%

The Conversion Unit is 53% more compact than a configuration of relay terminal blocks and a signal terminal block.

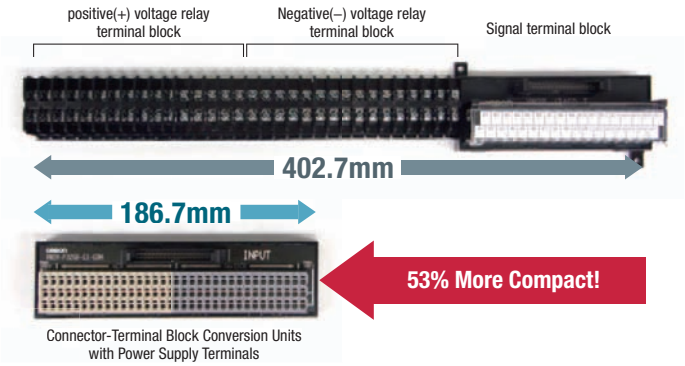

Wiring Work Reduced by 60%

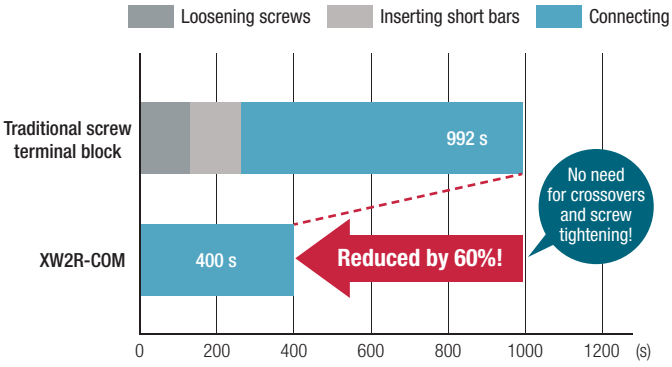

*Results of OMRON comparison for Unit with 32 push-in spring connections.

Excellent Extremely Easy to Connect

Ideal for connecting to PLCs from various companies.

Type: Units for PLCs

Wiring method: Push-in spring | Phillips screws | Slotted screws (rise-up)

Connector-Terminal Block Conversion Units for PLCs

XW2R-□□□GD-□□

XW2R-P□□GD-□□

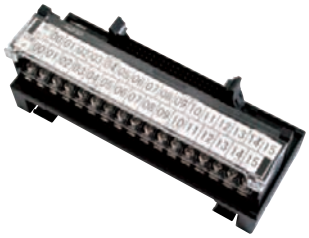

XW2R-J□□GD-□□

XW2R-E34GD-□□

We recommend a common terminal block.

Details: Page 6

- Units available for OMRON, Mitsubishi, and Keyence PLCs.
- A wiring pattern that is specialized for PLCs reduces work in checking signal layouts.
- Terminal block signal labels give the PLC addresses.
- Connector pins not used for PLCs were eliminated to minimize the number of pins and therefore the size.

Terminal Block Signal Labels Give the PLC addresses

Unit for OMRON PLC		NC m+1	00	01	02	03	04	05	06	07	08	09	10	11	12	13	14	15								
		COM m	00	01	02	03	04	05	06	07	08	09	10	11	12	13	14	15								
Unit for Mitsubishi PLC			10	11	12	13	14	15	16	17	18	19	1A	1B	1C	1D	1E	1F	COM							
		00	01	02	03	04	05	06	07	08	09	0A	0B	0C	0D	0E	0F	NC								
Unit for Keyence PLC			100	101	102	103	104	105	106	107	108	109	110	111	112	113	114	115	COM1							
		000	001	002	003	004	005	006	007	008	009	010	011	012	013	014	015	COM0								

Universal Outstanding Adaptability

Just one series for easy selection with high versatility to handle various applications.

Type: Units for General-purpose Devices

Wiring method: Push-in spring | Phillips screws | Slotted screws (rise-up)

Connector: MIL connector | FCN connector

Connector-Terminal Block Conversion Units for General-purpose Devices

XW2R-□□□□D-T

XW2R-P□□□D-T

XW2R-J□□□D-T

XW2R-E□□□D-T

- Wire Connectors and Terminal Blocks 1:1
- Applicable with PLCs from any manufacturer.
- Models available with 20, 34, 40, 50, and 60 poles.

Common Terminal Block

Achieve downsizing and reduce work by push-in spring connector .

Type: **Units for General-purpose Devices**

Wiring method: **Push-in spring**

Common Terminal Block

XW2R-P40□D-COM

For Positive(+) Voltages
XW2R-P40PD-COM

For Negative(–) Voltages
XW2R-P40MD-COM

■ Ideal for I/O commons to connect 2-wire devices.

Positive(+) and Negative(–) Connections
XW2R-P40BD-COM

■ Ideal for connecting 3-wire devices.

- Easy connections with less clutter around power supplies.
- Commons are wired on the PCB to eliminate the need to wire crossovers.
- Push-in spring connections.
- Select Units for Positive(+) Voltages, Negative(–) Voltages, or Both.

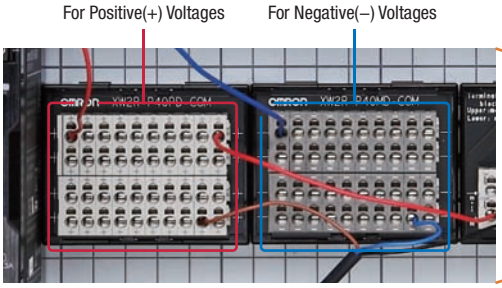

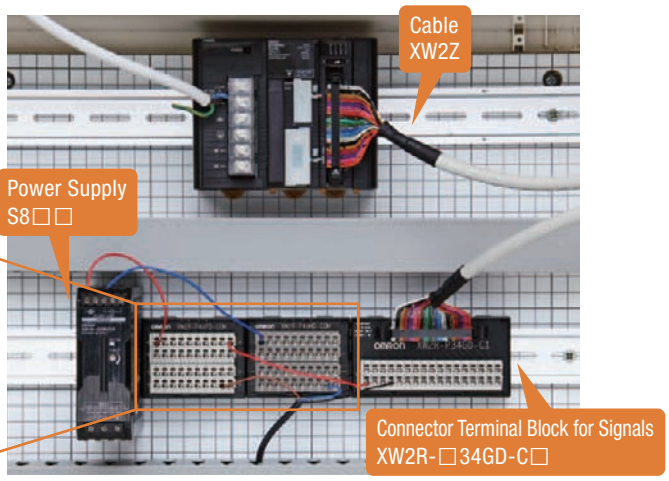

Are Your Control Panels Buried in DIN Track Screw Terminal Blocks?

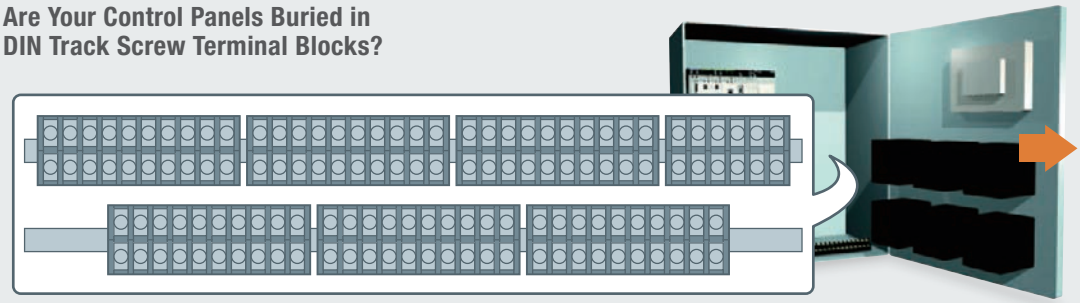

Save space with common terminal blocks.

Footprint Reduced by 43%

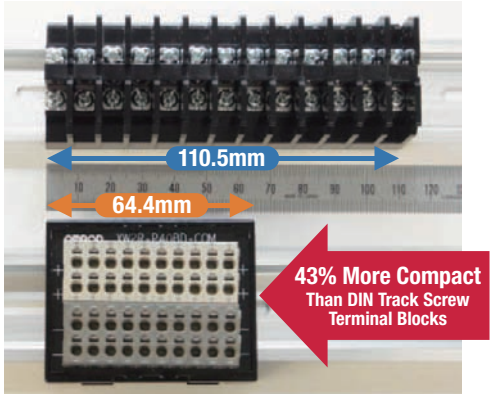

*Comparison based on number of possible common connections for DIN Track screw terminal blocks with 8.5-mm pitch.

Wiring Work Reduced by 70%

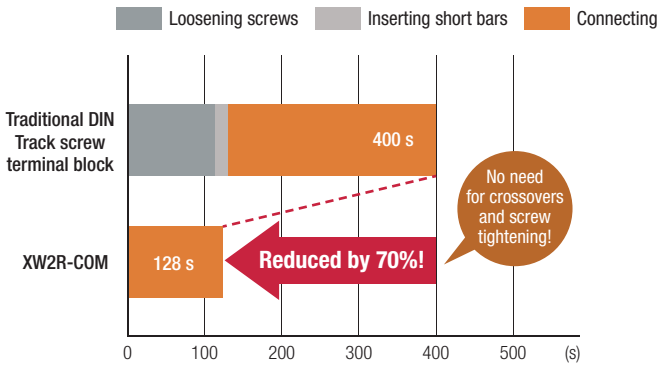

*Based on OMRON testing to estimate work for 32 common connections.

A Wide Range of connectors and Poles to Match Installation Needs

Units for PLCs

Units with Power Supply Terminals : XW2R-□□□□□-□□-COM

Units without Power Supply Terminals : XW2R-□□□□□-□□

Replace □ with the model codes in the following table.

	Units with Power Supply Terminals					Units without Power Supply Terminals		
Wiring method	Push-in spring 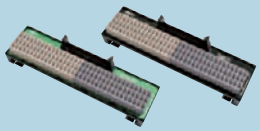		e-CON 		MIL connector 	Push-in spring 	Phillips screws 	Slotted screws (rise up) 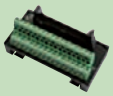
I/O points	16	32	16	32	-	32	32	32
OMRON PLCs	P16GD-C1	P32GD-C1	N16GD-C1	N32GD-C1	-	P34GD-C1	J34GD-C1	E34GD-C1
	-	P32GD-C2	-	N32GD-C2	-	P34GD-C2	J34GD-C2	E34GD-C2
	P16GD-C3	P32GD-C3		-	-	P34GD-C3	J34GD-C3	E34GD-C3
	-	P32GD-C4				P34GD-C4	J34GD-C4	E34GD-C4
Mitsubishi PLCs	-	P32GD-M1	-	-	G32GD-M1	P34GD-M1	J34GD-M1	E34GD-M1
		P32GD-M2				P34GD-M2	J34GD-M2	E34GD-M2
Keyence PLCs	-	P32GD-K1	-	-	-	P34GD-K1	J34GD-K1	-
						P40GD-K2*	J40GD-K2*	

*The XW2R-P40GD-K2 and XW2R-J40GD-K2 provide 40 poles each.

Units for General-purpose Devices

Units with Power Supply Terminals : XW2R-N08GD-COM

Units without Power Supply Terminals : XW2R-□□□□□-T

Replace □ with the model codes in the following table.

		Units with Power Supply Terminals	Units without Power Supply Terminals		
Wiring method		e-CON 	Push-in spring 	Phillips screws 	Slotted screws (rise up) 
number of poles		-	20,34,40,50,60	20,34,40,50,60	20,34,40,50,60
Mounted connector	MIL connector	XW2R-N08GD-COM	P20GD	J20GD	E20GD
			P34GD	J34GD	E34GD
			P40GD	J40GD	E40GD
			P50GD	J50GD	E50GD
			P60GD	J60GD	E60GD
	FCN connector	-	P40FD	J40FD	E40FD

Select the Wiring Method

How Many Times is Retightening Necessary?

Wiring, inspections, shipping, maintenance...

Retightening is not required for push-in spring connections.

Push-in spring

Just Push in the Wire for a Sure Connection

- Connect any of 3 types of wires.

Ferrules

Solid wires

Stranded wires

*Blade terminals can also be used. Provide insulation.

- Flat mark-tubes can be used.
- Thick wires can be used (AWG28 to AWG14 (0.08 to 2.0 mm^2)).

*AWG24 to AWG14 for ferrules.
(However, the outer diameter of the insulation must be 4 mm max.)

- Testers can be inserted in the release holes.

Easy, Fast Connection and Removal by Just about Anyone

Ferrules

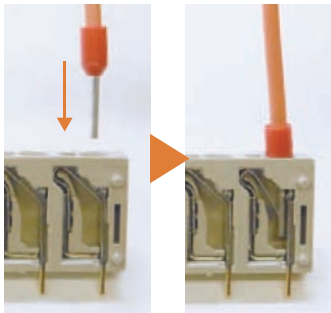

1. Just press the ferrule all the way in.
2. You're done.

Naked Wires

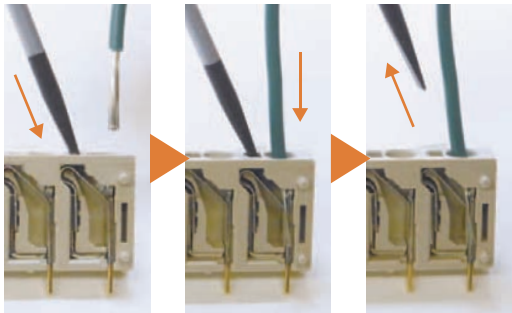

1. Insert a tool into the release hole.
2. Insert the wire while the tool is inserted.
3. Remove the tool, and you're done.

Removal

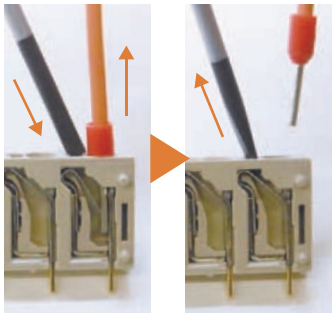

1. Insert a tool into the release hole and pull out the wire.
2. Remove the tool.

Select the Installation Method

Units That Mount to DIN Track

Mounting and Removal are Fast and Easy with DIN Track

Mounting

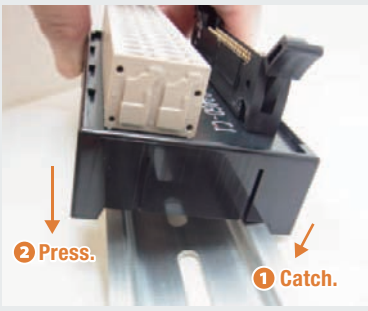

1. Catch the Terminal Block on the DIN Track.
2. Press down on the Terminal Block to mount it.

Removal

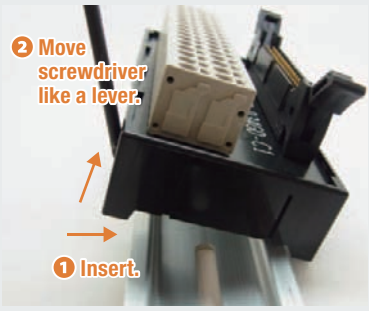

1. Insert a flat-blade screwdriver into the DIN Track lock.
2. Move the screwdriver like a lever to free the lock.

A Wealth of OMRON Connector Variations

Tensile Strength Meets IEC Standard

(IEC60947-7-1 Standard)

Actual value of tensile strength is equivalent to screw connections.

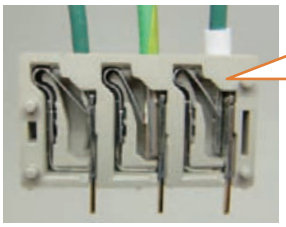

IEC standard (cable diameter)	Screwless connection	Screw connection
20 N min. (AWG20)	125 N	112 N

*The values for screwless and screw connections are actual values measures by OMRON for the XW2R.

Greatly Reduce Connection Work!

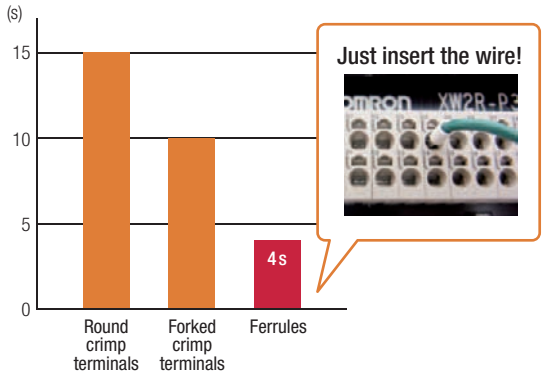

Phillips screws **Slotted screws (rise-up)**

Traditional Screw Terminal Blocks Are Also Available

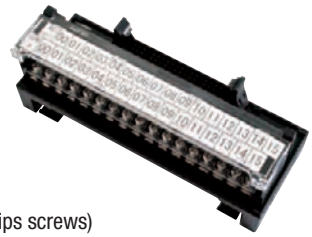

(Phillips screws)

- Terminal blocks are shipped with the screws open for immediate connection.
- The cover can be locked open for better work efficiency.
- Both round and forked crimp terminals can be used, and screws will not fall out.

e-CON

Reduce Wiring Mistakes!

- Standard connectors for sensor inputs that mate with e-CON connectors from other manufacturers.
- Easy to connect and ideal for standardization.

Different Models for Different Installation Methods

XW2R-□□□□□-□

The following codes are used for this □ in the model number.
D: For DIN Track
V: Vertical screw mounting
Blank: Horizontal screw mounting

Vertical Screw Mounting* **Horizontal Screw Mounting***

Select the Best Type for Actual Case of Use

Vertical screw mounting

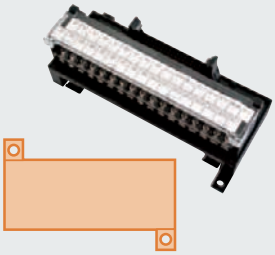

Horizontal screw mounting

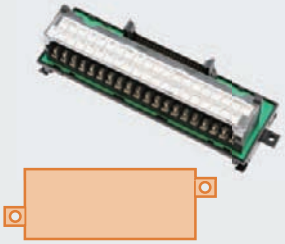

All Models Mount to DIN Track

- The ribs for screw mounting are positioned within the DIN Track so that they do not interfere with DIN Track mounting parts or End Plates. Even when connecting Horizontal Mounting Units to each other, the ribs do not interfere so there is no gap between the Units.

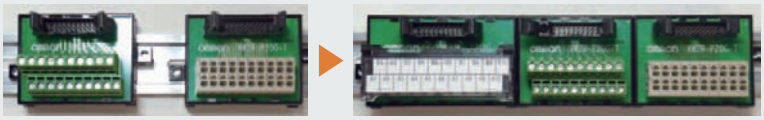

* For details, refer to page 67.

Cables for Connector-Terminal Block Conversion Units

Shielded Cables Model numbers (common portion) : **XW2Z-□□□□**

Replace □ with the model codes in the following table.

Connector	Connector	Cable length										
		0.25m	0.5m	1m	1.5m	2m	3m	5m	7m	10m	15m	20m
FCN connector, 24 poles	MIL connector, 20 poles	-	050A	100A	150A	200A	300A	500A	700A	010A	15MA	20MA
FCN connector, 40 poles	MIL connector, 20 poles ×2*	-	-	100D	150D	200D	300D	500D	-	010D	15MD	20MD
FCN connector, 40 poles	MIL connector, 20 poles ×2*	-	-	100L	150L	200L	300L	500L	-	010L	15ML	20ML
FCN connector, 40 poles	MIL connector, 40 poles	-	050B	100B	150B	200B	300B	500B	700B	010B	15MB	20MB
MIL connector, 14 poles	MIL connector, 14 poles	-	050AA	100AA	-	200AA	-	500AA	-	010AA	-	-
MIL connector, 20 poles	MIL connector, 20 poles	-	C50X	100X	-	200X	300X	500X	-	010X	-	-
MIL connector, 20 poles	Loose wires with crimp terminals, 20 poles	-	-	100F	150F	200F	300F	500F	-	010F	15MF	20MF
MIL connector, 40 poles	MIL connector, 20 poles ×2	-	-	100N	150N	200N	300N	500N	-	010N	15MN	20MN
MIL connector, 34 poles	MIL connector, 34 poles	-	050EE	100EE	150EE	200EE	300EE	500EE	-	-	-	-
MIL connector, 40 poles	MIL connector, 40 poles	C25K	C50K	100K	150K	200K	300K	500K	-	010K	-	-

*The wiring is different. Refer to page 52 for details.

Unshielded Cables Model numbers (common portion) : **XW2Z-□□□□□□-L□□**

Replace □ with the model codes in the following table.

Connector	Connector	Cable length										
		0.3m	0.5m	0.75m	1m	1.5m	2m	3m	4m	5m	7m	10m
FCN connector, 24 poles	MIL connector, 20 poles	-	0050AD -L	-	0100AD -L	-	0200AD -L	0300AD -L	-	-	-	-
FCN connector, 40 poles	MIL connector, 20 poles ×2*	-	-	-	0100BH -L01	0150BH -L01	0200BH -L01	0300BH -L01	0400BH -L01	0500BH -L01	-	-
FCN connector, 40 poles	MIL connector, 20 poles ×2*	-	-	-	0100BH -L02	0150BH -L02	0200BH -L02	0300BH -L02	0400BH -L02	0500BH -L02	-	-
FCN connector, 40 poles	MIL connector, 40 poles	-	0050BF -L	-	0100BF -L	0150BF -L	0200BF -L	0300BF -L	-	0500BF -L	0700BF -L	1000BF -L
FCN connector, 56 poles	MIL connector, 20 poles ×3*	-	-	-	-	0150CJ -L01	0200CJ -L01	0300CJ -L01	-	-	-	-
FCN connector, 56 poles	MIL connector, 20 poles ×3*	-	-	-	-	0150CJ -L02	0200CJ -L02	0300CJ -L02	-	-	-	-
FCN connector, 56 poles	MIL connector, 40 poles + 20 poles	-	-	-	-	0150CK-L01 0150CK-L02	0200CK-L01 0200CK-L02	-	-	-	-	-
FCN connector, 56 poles	MIL connector, 60 poles	-	-	-	0100CG -L	-	0200CG -L	0300CG -L	-	-	-	-
MIL connector, 20 poles	MIL connector, 20 poles	-	0050DD -L	-	0100DD -L	-	0200DD -L	-	-	-	-	-
MIL connector, 34 poles	MIL connector, 34 poles	-	0050EE -L	-	0100EE -L	0150EE -L	0200EE -L	0300EE -L	-	0500EE -L	0700EE -L	1000EE -L
MIL connector, 40 poles	MIL connector, 20 poles ×2*	-	-	0075FH -L01	0100FH -L01	-	0200FH -L01	0300FH -L01	-	0500FH -L01	-	-
MIL connector, 40 poles	MIL connector, 20 poles ×2*	-	-	0075FH -L02	0100FH -L02	-	0200FH -L02	0300FH -L02	-	0500FH -L02	-	-
MIL connector, 40 poles	MIL connector, 40 poles	0030FF -L	0050FF -L	-	0100FF -L	0150FF -L	0200FF -L	0300FF -L	-	0500FF -L	0700FF -L	1000FF -L

*The wiring is different. Refer to page 57 for details.

Connector-Terminal Block Conversion Units Designed Specifically to Connect PLCs

- Wiring patterns that are specifically designed for PLCs reduce the work required to check signal layout.
- Terminal block signal labels give the PLC addresses.
- Models available with Phillips screw, slotted screw, push-in, or e-CON connections.
- Models available with and without power supply terminals.
- Mounting to DIN Track is possible.

Models that are mounted with screws are also available.
Refer to page 67.

Item	PLC Maker	OMRON	Mitsubishi	Keyence
With power supply terminals	Appearance			
	Model	XW2R-□□□GD-C□-COM	XW2R-□32GD-M□-COM	XW2R-P32GD-K1-COM
	Page	Page 12	Page 23	Page 32
Without power supply terminals	Appearance			
	Model	XW2R-□34GD-C□	XW2R-□34GD-M□	XW2R-□□□GD-K□
	Page	Page 19	Page 28	Page 34

Options (Order Separately)

Connecting Cables for Connector-Terminal Block Conversion Units
Refer to page 49.

Models for Connection to OMRON PLCs with power supply terminals

Model List

XW2R - □□□G D - C□ - COM

Wiring method	
P	Push-in spring
N	e-CON Type

I/O Points	
16	16 Points
32	32 Points

Mounted Connector type	
G	MIL (XG4A)

Mounting method	
D	DIN Track mounting

PLC type	
C1	Refer to the following table for 16-pole models and to page 13 for 32-pole models.
C2	
C3	
C4	

Power supply terminals	
COM	Provided

Models for OMRON PLCs

Models with 16 Poles

I/O	I/O Points	I/O Unit Model	Models that connect to PLCs	Connecting cables *
Input	32	CJ1W-ID231	XW2R-P16GD-C1-COM: 2 pcs XW2R-N16GD-C1-COM: 2 pcs	XW2Z-□□□D: 1 Cable
		CS1W-ID231		
	64	CJ1W-ID261	XW2R-P16GD-C1-COM: 4 pcs XW2R-N16GD-C1-COM: 4 pcs	XW2Z-□□□D: 2 Cables
		CS1W-ID261		
I/O	16	CJ1W-MD231 (inputs)	XW2R-P16GD-C1-COM: 1 pcs XW2R-N16GD-C1-COM: 1 pcs	XW2Z-□□□A: 1 Cable
	32	CJ1W-MD261 (inputs)	XW2R-P16GD-C1-COM: 2 pcs XW2R-N16GD-C1-COM: 2 pcs	XW2Z-□□□D: 1 Cable
		CS1W-MD261 (inputs)		
		CS1W-MD262 (inputs)		
		CS1W-MD561 (inputs)		
Input	32	CJ1W-ID232	XW2R-P16GD-C1-COM: 2 pcs XW2R-N16GD-C1-COM: 2 pcs	XW2Z-□□□N: 1 Cable
		CJ1W-ID233		
I/O		CJ1W-MD263 (inputs)		
		CJ1W-MD563 (inputs)		
Input	64	CJ1W-ID262	XW2R-P16GD-C1-COM: 4 pcs XW2R-N16GD-C1-COM: 4 pcs	XW2Z-□□□N: 2 Cables
Output	32	CJ1W-OD231	XW2R-P16GD-C3-COM: 2 pcs	XW2Z-□□□L: 1 Cable
		CS1W-OD231		
		CS1W-OD232		
		CJ1W-OD232	XW2R-P16GD-C3-COM: 2 pcs	XW2Z-□□□N: 2 Cables
		CJ1W-OD233		
		CJ1W-OD234		
	64	CJ1W-OD261	XW2R-P16GD-C3-COM: 4 pcs	XW2Z-□□□L: 2 Cables
		CS1W-OD261		
		CJ1W-OD262	XW2R-P16GD-C3-COM : 4 pcs	XW2Z-□□□N: 2 Cables
		CJ1W-OD263		
I/O	16	CJ1W-MD231 (outputs)	XW2R-P16GD-C3-COM: 1 pcs	XW2Z-□□□A: 1 Cable
	32	CJ1W-MD261 (outputs)	XW2R-P16GD-C3-COM: 2 pcs	XW2Z-□□□L: 1 Cable
		CS1W-MD261 (outputs)		
		CS1W-MD262 (outputs)		
		CS1W-MD561 (outputs)		

* □□□ is replaced by the cable length. Refer to page 49.

Note: Connection is not possible to all OMRON PLC Units.
This Connector-Terminal Block Conversion Unit is for NPN. For PNP, reverse the polarity of the external power supply and I/O on the Connector-Terminal Block Conversion Unit.

Models with 32 Poles

I/O	I/O Points	I/O Unit Model	Models that connect to PLCs	Connecting cables *
Input	32	CJ1W-ID231	XW2R-P32GD-C1-COM: 1 pcs XW2R-N32GD-C1-COM: 1 pcs	XW2Z-□□□B: 1 Cable, or XW2Z-□□□□BF-L: 1 Cable
		CS1W-ID231		
	64	CJ1W-ID261	XW2R-P32GD-C1-COM: 2 pcs XW2R-N32GD-C1-COM: 2 pcs	XW2Z-□□□B: 2 Cables, or XW2Z-□□□□BF-L: 2 Cables
		CS1W-ID261		
I/O	32	CJ1W-MD261 (inputs)	XW2R-P32GD-C1-COM: 1 pcs XW2R-N32GD-C1-COM: 1 pcs	XW2Z-□□□B: 1 Cable, or XW2Z-□□□□BF-L: 1 Cable
		CS1W-MD261 (inputs)		
		CS1W-MD262 (inputs)		
		CS1W-MD561 (inputs)		
Input	32	CJ1W-ID232	XW2R-P32GD-C2-COM: 1 pcs XW2R-N32GD-C2-COM: 1 pcs	XW2Z-□□□K: 1 Cable, or XW2Z-□□□□FF-L: 1 Cable
		CJ1W-ID233		
	64	CJ1W-ID262	XW2R-P32GD-C2-COM: 2 pcs XW2R-N32GD-C2-COM: 2 pcs	XW2Z-□□□K: 2 Cables, or XW2Z-□□□□FF-L: 2 Cables
I/O	32	CJ1W-MD263 (inputs)	XW2R-P32GD-C2-COM: 1 pcs XW2R-N32GD-C2-COM: 1 pcs	XW2Z-□□□K: 1 Cable, or XW2Z-□□□□FF-L: 1 Cable
		CJ1W-MD563 (inputs)		
Output	32	CJ1W-OD231	XW2R-P32GD-C3-COM: 1 pcs	XW2Z-□□□B: 1 Cable, or XW2Z-□□□□BF-L: 1 Cable
		CS1W-OD231		
		CS1W-OD232		
	64	CJ1W-OD261	XW2R-P32GD-C3-COM: 2 pcs	XW2Z-□□□B: 2 Cables, or XW2Z-□□□□BF-L: 2 Cables
		CS1W-OD261		
		CS1W-OD262		
I/O	32	CJ1W-MD261 (outputs)	XW2R-P32GD-C3-COM: 1 pcs	XW2Z-□□□B: 1 Cable, or XW2Z-□□□□BF-L: 1 Cable
		CS1W-MD261 (outputs)		
		CS1W-MD262 (outputs)		
		CS1W-MD561 (outputs)		
Output	32	CJ1W-OD232	XW2R-P32GD-C4-COM: 1 pcs	XW2Z-□□□K: 1 Cable, or XW2Z-□□□□FF-L: 1 Cable
		CJ1W-OD233		
		CJ1W-OD234		
	64	CJ1W-OD262	XW2R-P32GD-C4-COM: 2 pcs	XW2Z-□□□K: 2 Cables, or XW2Z-□□□□FF-L: 2 Cables
		CJ1W-OD263		
I/O	32	CJ1W-MD263 (outputs)	XW2R-P32GD-C4-COM: 1 pcs	XW2Z-□□□K: 1 Cable, or XW2Z-□□□□FF-L: 1 Cable
		CJ1W-MD563 (outputs)		

* □□□□ is replaced by the cable length.

Note: Connection is not possible to all OMRON PLC Units.
This Connector-Terminal Block Conversion Unit is for NPN. For PNP, reverse the polarity of the external power supply and I/O on the Connector-Terminal Block Conversion Unit.

Connection Examples

32-point Input Unit or Output Unit
CJ1W-ID231 32-point
CJ1W-OD231 32-point

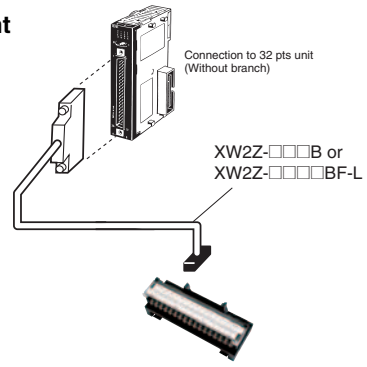

64-point Input Unit or Output Unit
CJ1W-ID261 64-point
CJ1W-OD261 64-point

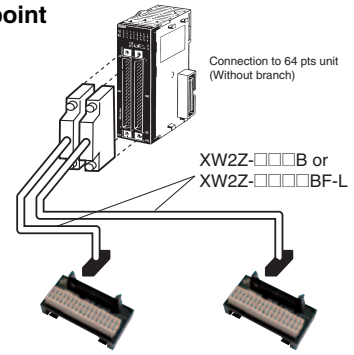

64-point I/O Unit
CJ1W-MD563 IN 32 Points, OUT 32 Points

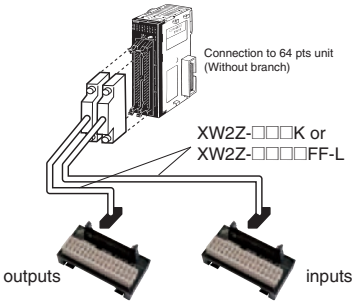

Models for Connection to OMRON PLCs with power supply terminals

Application Example

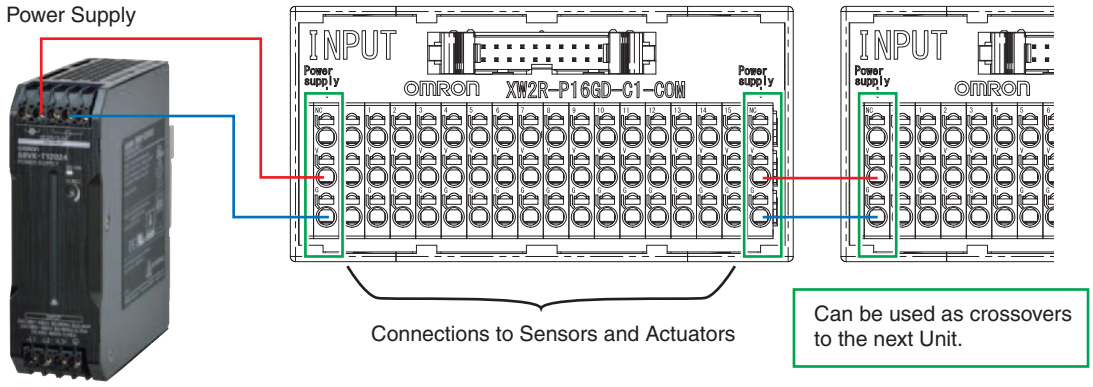

PLC Connecting Cables

XW2Z-□□□B, XW2Z-□□□□BF-L
Connectors: One 40-pin Connector Made by Fujitsu Component, Ltd. to One 40-pin MIL Connector

Appearance	Cable length L (m)	With shield	Without shield
		Model	Model
	0.5	XW2Z-050B	XW2Z-0050BF-L
	1	XW2Z-100B	XW2Z-0100BF-L
	1.5	XW2Z-150B	XW2Z-0150BF-L
	2	XW2Z-200B	XW2Z-0200BF-L
	3	XW2Z-300B	XW2Z-0300BF-L
	5	XW2Z-500B	XW2Z-0500BF-L
	7	XW2Z-700B	XW2Z-0700BF-L
	10	XW2Z-010B	XW2Z-1000BF-L
	15	XW2Z-15MB	---
	20	XW2Z-20MB	---

Cable length L (m)

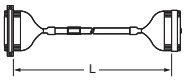

Wiring Diagram

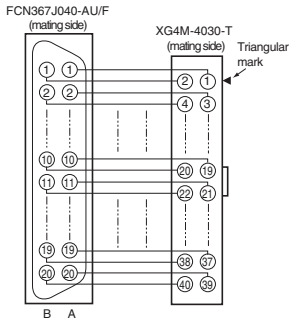

XW2Z-□□□K, XW2Z-□□□□FF-L
Connectors: One 40-pin Connector to One 40-pin MIL Connector

Appearance	Cable length L (m)	With shield	Without shield
		Model	Model
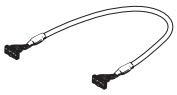	0.25	XW2Z-C25K	---
	0.5	XW2Z-C50K	XW2Z-0050FF-L
	1	XW2Z-100K	XW2Z-0100FF-L
	1.5	XW2Z-150K	XW2Z-0150FF-L
	2	XW2Z-200K	XW2Z-0200FF-L
	3	XW2Z-300K	XW2Z-0300FF-L
	5	XW2Z-500K	XW2Z-0500FF-L
	7	---	XW2Z-0700FF-L
	10	XW2Z-010K	XW2Z-1000FF-L

Cable length L (m)

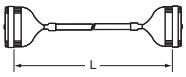

Wiring Diagram

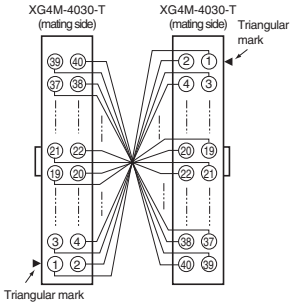

Note: Wire the connector terminals 1:1 so that the connector terminal numbers coincide.

Models for Connection to OMRON PLCs with power supply terminals

Push-in spring

Ordering Information

Appearance*	I/O Points	Input/Output	Model	Dimension A (mm)
	16	Input	**XW2R-P16GD-C1-COM**	98.5
		Output	**XW2R-P16GD-C3-COM**	
	32	Input	**XW2R-P32GD-C1-COM**	186.7
			XW2R-P32GD-C2-COM	
		Output	**XW2R-P32GD-C3-COM**	
			XW2R-P32GD-C4-COM	

* Input models (XW2R-P□□GD-C1/C2-COM) are black and output models (XW2R-P□□GD-C3/C4-COM) are green.

Ratings and Specifications

Rated current		16 Points: 1A/signal, 4A/common 32 Points: 1A/signal, 8A/common
Rated voltage		24VDC
Insuration resistance		100MΩ min. (at 500VDC)
Dielectric strength		500VAC for 1 ferrulemin (leakage current: 1 mA max.)
Ambient operating temperature		0 to 55°C
Applicable wires	**Applicable wire sizes**	AWG 24 to 14 (ferrules) AWG 28 to 14 (stranded or solid) (Outer diameter of insulation must be 4 mm max)
	Stripped length	AWG28-16: 8 to 10 mm AWG14: 9 to 10 mm

Details on Crimp Terminals

Applicable Ferrules

- Use ferrules of the lengths and thicknesses specified below.If other lengths or thicknesses are used, connection maynot be possible or it may not be possible to insert or remove the posts.

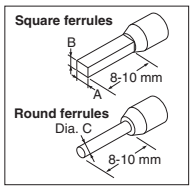

- Ferrule Dimensions

Square ferrules	**Dimension A (Width)**	2.7 mm max.	The cross-sectional area after crimping must be 4.8 mm² or less
	Dimension B (Height)	2 mm max.	
Round ferrules	**Dimension C (Diameter)**	2 mm dia. max. (after crimping)	

Refer to page 46 for information on Square/Round ferrule and use tool.

Dimensions

(Unit: mm)

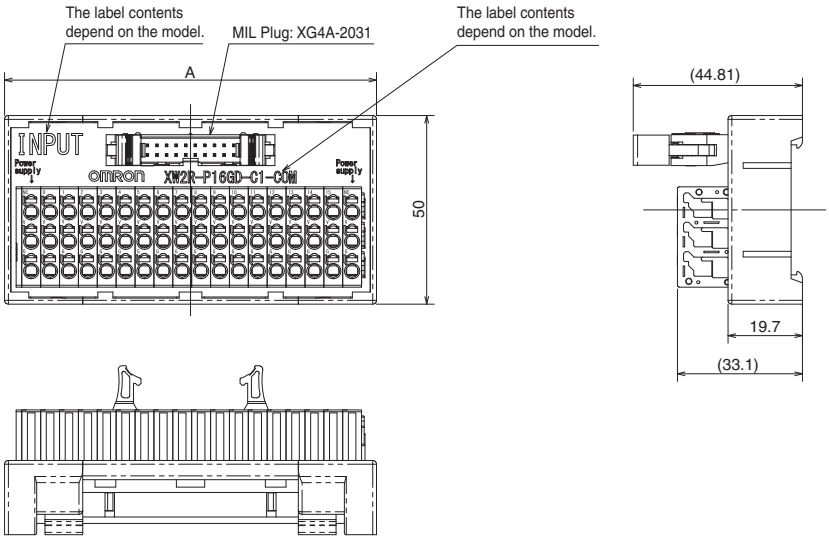

Models for Connection to OMRON PLCs with power supply terminals

Wiring Diagram

XW2R-P16GD-C1-COM

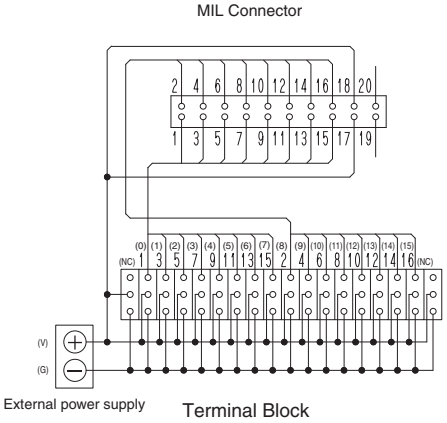

XW2R-P16GD-C3-COM

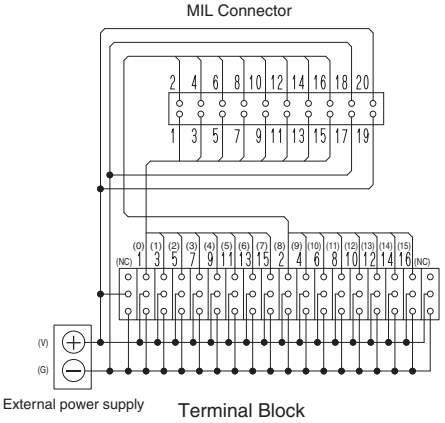

XW2R-P32GD-C1-COM

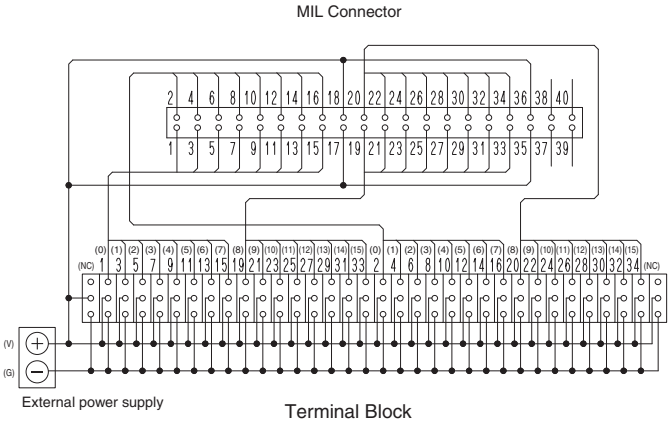

XW2R-P32GD-C2-COM

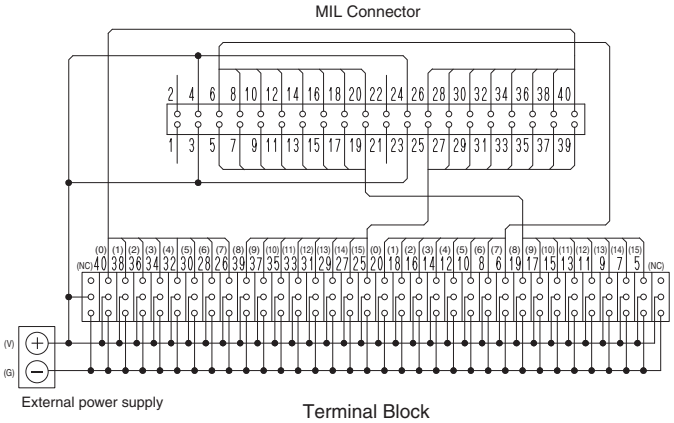

XW2R-P32GD-C3-COM

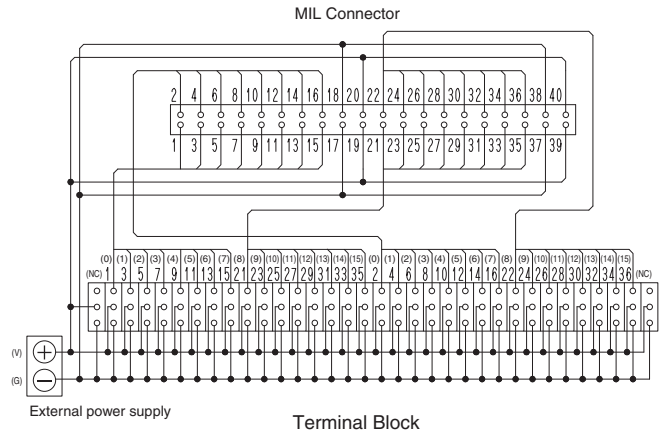

XW2R-P32GD-C4-COM

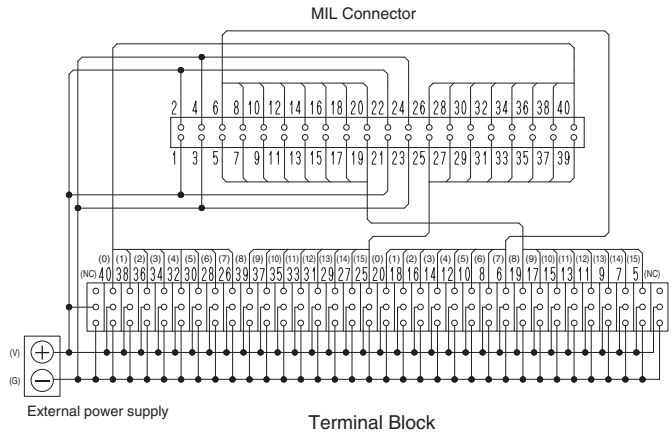

Label Contents

XW2R-P16GD-C1-COM
XW2R-P16GD-C3-COM

NC	0	1	2	3	4	5	6	7	8	9	10	11	12	13	14	15	NC
V	V	V	V	V	V	V	V	V	V	V	V	V	V	V	V	V	V
G	G	G	G	G	G	G	G	G	G	G	G	G	G	G	G	G	G

XW2R-P32GD-C1-COM, XW2R-P32GD-C3-COM
XW2R-P32GD-C2-COM, XW2R-P32GD-C4-COM

NC	0	1	2	3	4	5	6	7	8	9	10	11	12	13	14	15	0	1	2	3	4	5	6	7	8	9	10	11	12	13	14	15	NC
V	V	V	V	V	V	V	V	V	V	V	V	V	V	V	V	V	V	V	V	V	V	V	V	V	V	V	V	V	V	V	V	V	V
G	G	G	G	G	G	G	G	G	G	G	G	G	G	G	G	G	G	G	G	G	G	G	G	G	G	G	G	G	G	G	G	G	G

Models for Connection to OMRON PLCs with power supply terminals

e-CON Type

Ordering Information

Appearance	I/O Points	Input/Output	Model	Dimension A (mm)
	16	Input	**XW2R-N16GD-C1-COM**	98.5
	32		**XW2R-N32GD-C1-COM**	186.7
			XW2R-N32GD-C2-COM	

Ratings and Specifications

Rated current		Power supply terminal block: 4 A/16 poles or 8 A/32 poles
		Connectors/e-CON Connectors: 1 A (However, rated current of e-CON Connector depends on the wires that are used.)
Rated voltage		24VDC
Insuration resistance		100MΩ min. (at 500VDC)
Dielectric strength		500VAC for 1 min (leakage current: 1 mA max.)
Ambient operating temperature		0 to 55°C
Applicable wires	**Applicable wire sizes**	AWG 24 to 14 (ferrules) AWG 28 to 14 (stranded wires) AWG 28 to 16 (solid wires)∗ (Outer diameter of insulation must be 4 mm max)
	Stripped length	AWG28-16: 8 to 10 mm AWG14: 9 to 10 mm

∗This is the applicable range for the power supply terminal block. For the applicable wire sizes for I/O Connectors (e-CON), refer to page 37.

Refer to page 37 for the recommended e-CON Connectors.

Dimensions

(Unit: mm)

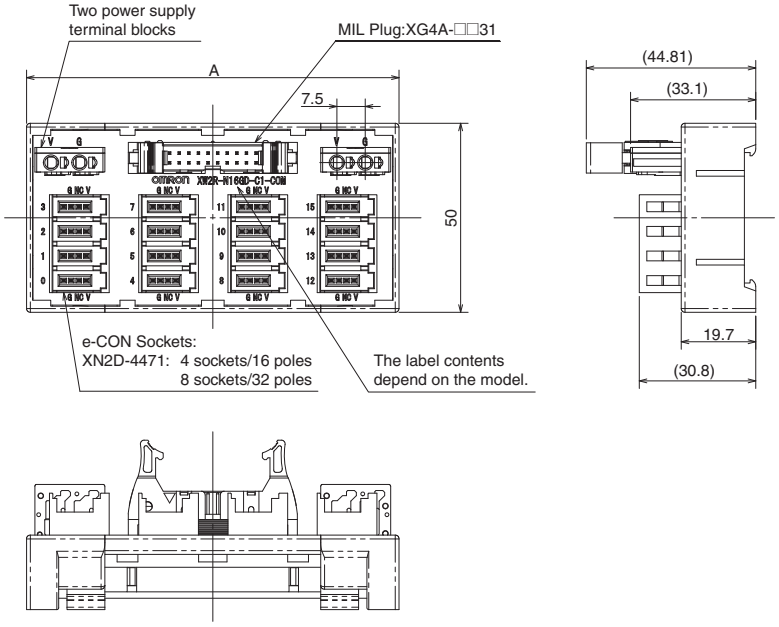

Models for Connection to OMRON PLCs with power supply terminals

Wiring Diagram

XW2R-N16GD-C1-COM

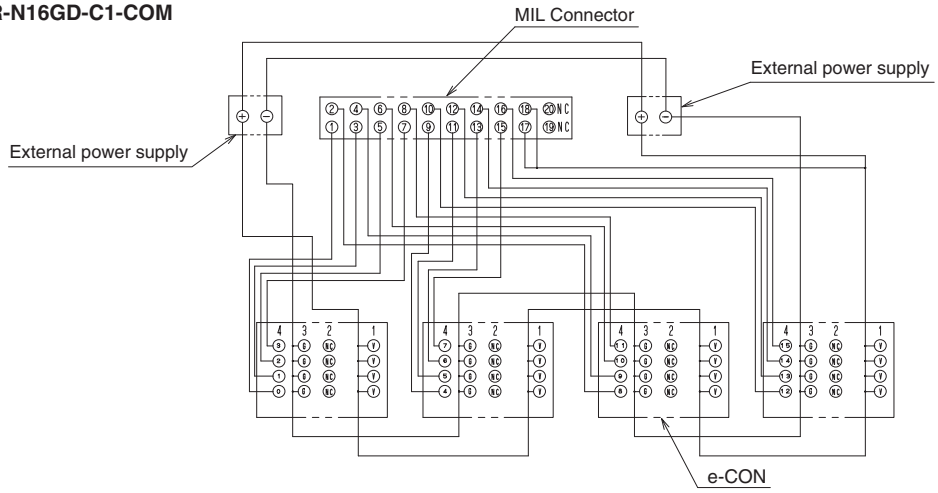

XW2R-N32GD-C1-COM

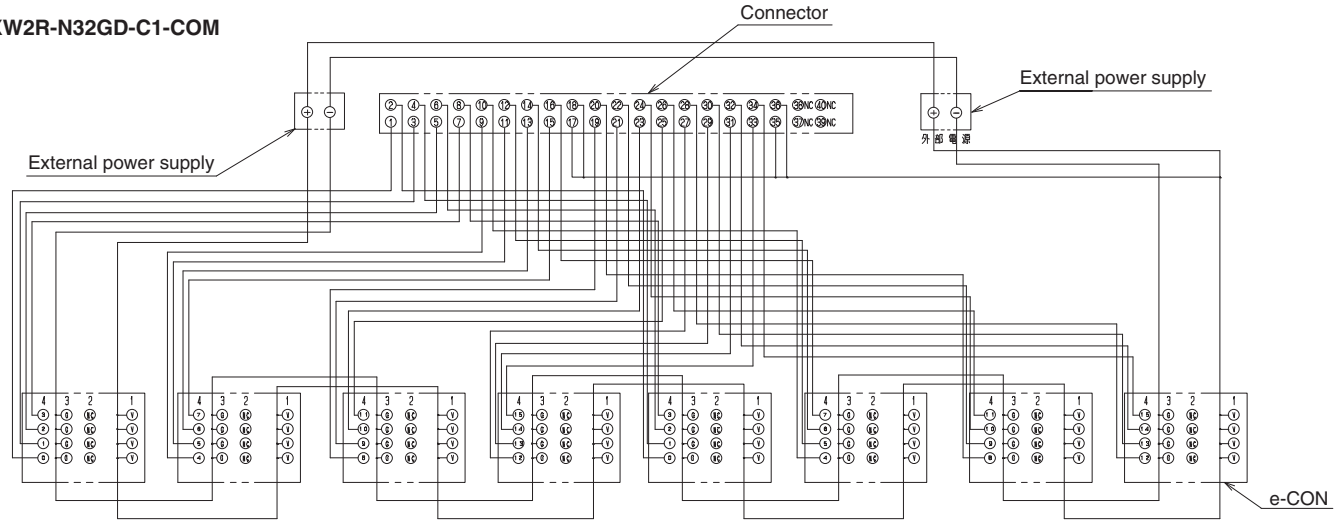

XW2R-N32GD-C2-COM

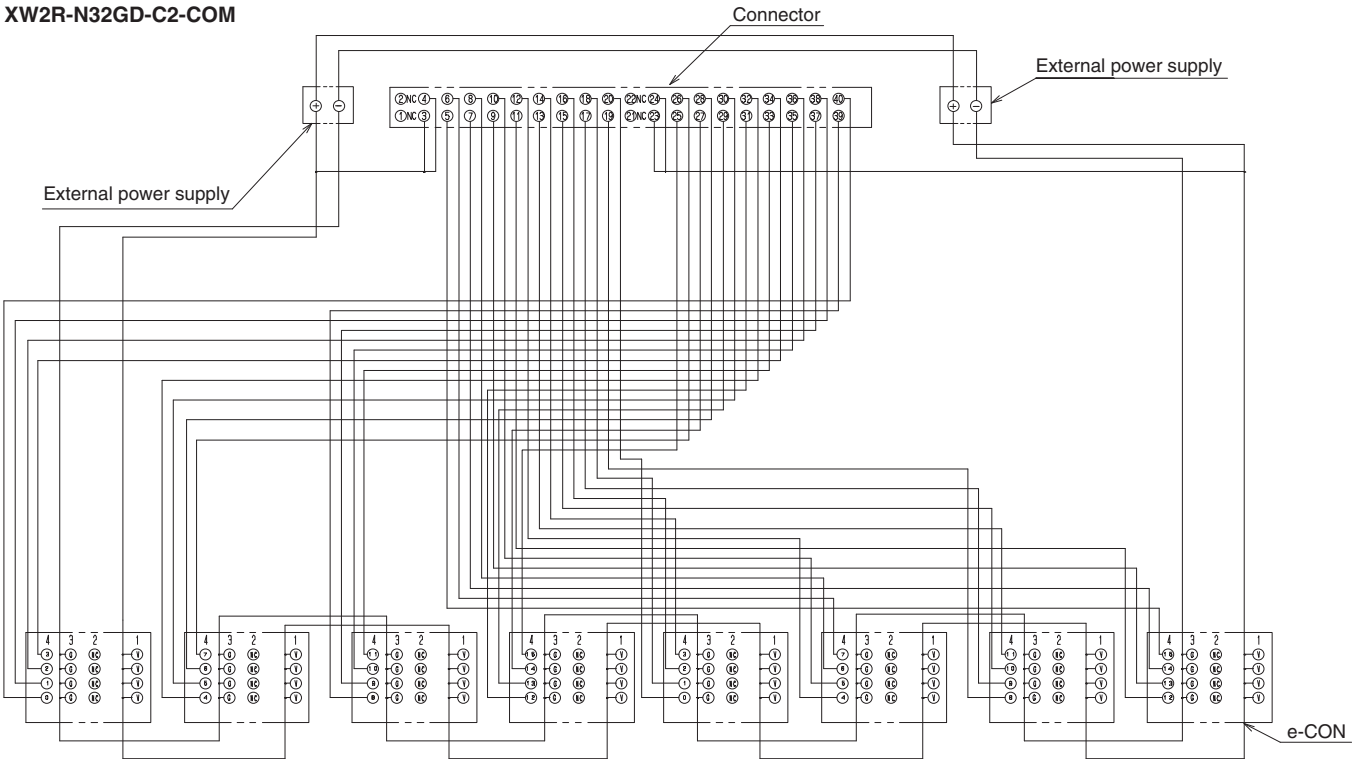

Models for Connection to OMRON PLCs without power supply terminals

Model List

XW2R - □ 34 G D - C □

Wiring method	
J	Phillips screw
E	Slotted screw (rise up)
P	Push-in spring

Number of poles	
34	34 poles (I/O points: 32 points)

Mounted Connector type	
G	MIL (XG4A)

Mounting method	
D	DIN Track mounting

PLC type	
C1	Refer to the following table for details.
C2	
C3	
C4	

Models for OMRON PLCs

I/O	I/O Points	I/O Unit Model	Models that connect to PLCs *1	Connecting cables *2
Input	32	CJ1W-ID231	XW2R-□34GD-C1: 1 pcs	XW2Z-□□□B: 1 Cable, or XW2Z-□□□□BF-L: 1 Cable
		CS1W-ID231		
	64	CJ1W-ID261	XW2R-□34GD-C1: 2 pcs	XW2Z-□□□B: 2 Cables, or XW2Z-□□□□BF-L: 2 Cables
		CS1W-ID261		
I/O	32	CJ1W-MD261 (inputs)	XW2R-□34GD-C1: 1 pcs	XW2Z-□□□B: 1 Cable, or XW2Z-□□□□BF-L: 1 Cable
		CS1W-MD261 (inputs)		
		CS1W-MD262 (inputs)		
		CS1W-MD561 (inputs)		
Input	32	CJ1W-ID232	XW2R-□34GD-C2: 1 pcs	XW2Z-□□□K: 1 Cable, or XW2Z-□□□□FF-L: 1 Cable
		CJ1W-ID233		
	64	CJ1W-ID262	XW2R-□34GD-C2: 2 pcs	XW2Z-□□□K: 2 Cables, or XW2Z-□□□□FF-L: 2 Cables
I/O	32	CJ1W-MD263 (inputs)	XW2R-□34GD-C2: 1 pcs	XW2Z-□□□K: 1 Cable, or XW2Z-□□□□FF-L: 1 Cable
		CJ1W-MD563 (inputs)		
Output	32	CJ1W-OD231	XW2R-□34GD-C3: 1 pcs	XW2Z-□□□B: 1 Cable, or XW2Z-□□□□BF-L: 1 Cable
		CS1W-OD231		
		CS1W-OD232		
	64	CJ1W-OD261	XW2R-□34GD-C3: 2 pcs	XW2Z-□□□B: 2 Cables, or XW2Z-□□□□BF-L: 2 Cables
		CS1W-OD261		
		CS1W-OD262		
I/O	32	CJ1W-MD261 (outputs)	XW2R-□34GD-C3: 1 pcs	XW2Z-□□□B: 1 Cable, or XW2Z-□□□□BF-L: 1 Cable
		CS1W-MD261 (outputs)		
		CS1W-MD262 (outputs)		
		CS1W-MD561 (outputs)		
Output	32	CJ1W-OD232	XW2R-□34GD-C4: 1 pcs	XW2Z-□□□K: 1 Cable, or XW2Z-□□□□FF-L: 1 Cable
		CJ1W-OD233		
		CJ1W-OD234		
	64	CJ1W-OD262	XW2R-□34GD-C4: 2 pcs	XW2Z-□□□K: 2 Cables, or XW2Z-□□□□FF-L: 2 Cables
		CJ1W-OD263		
I/O	32	CJ1W-MD263 (outputs)	XW2R-□34GD-C4: 1 pcs	XW2Z-□□□K: 1 Cable, or XW2Z-□□□□FF-L: 1 Cable
		CJ1W-MD563 (outputs)		

***1** Replace the box (□) with the wiring method code (J, E, or P).
***2** □□□□ is replaced by the cable length. For details, refer to page 14.
Note: 1. Connection is not possible to all OMRON PLC Units.
2. There is one common for each 32 points.

Models for Connection to OMRON PLCs without power supply terminals

Phillips screw

Ordering Information

Appearance	I/O Points (Number of poles)	Model
	32 (34)	**XW2R-J34GD-C1**
		XW2R-J34GD-C2
		XW2R-J34GD-C3
		XW2R-J34GD-C4

Ratings and Specifications

Rated current		0.5 A/signal, 4 A/common
Rated voltage		24VDC
Insuration resistance		100MΩ min. (at 500VDC)
Dielectric strength		500VAC for 1 min (leakage current: 1 mA max.)
Ambient operating temperature		0 to 55°C
Applicable wires	**Applicable wire sizes**	AWG 22 to 16 (round or forked crimp terminals) AWG 26 to 16 (stranded or solid wires)
	Stripped length	9 mm
	Tightening	0.5 N·m

Details on Crimp Terminals

Wiring Terminal Blocks

- Using Crimp Terminals (With a Terminal Block with M3 Screws)

Terminal Screw Tightening Torque

- Use a tightening torque of 0.5 N·m when connecting wires or crimp terminals to the terminal block.

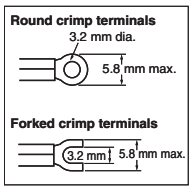

Applicable crimp terminals		Applicable wires
Round crimp terminals	1.25-3	AWG 22 to 16 (0.30 to 1.25 mm²)
Forked crimp terminals	1.25Y-3	AWG 22 to 16 (0.30 to 1.25 mm²)

Dimensions

(Unit: mm)

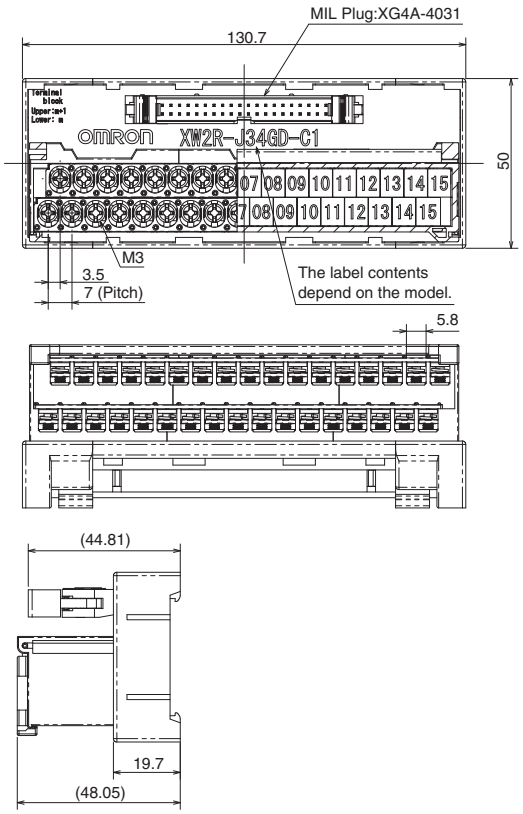

Wiring Diagram

XW2R-J34GD-C1

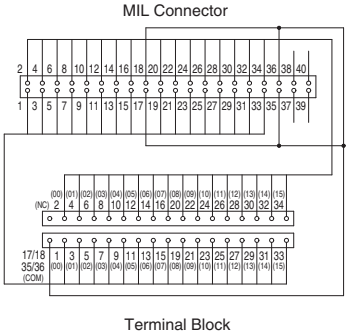

XW2R-J34GD-C2

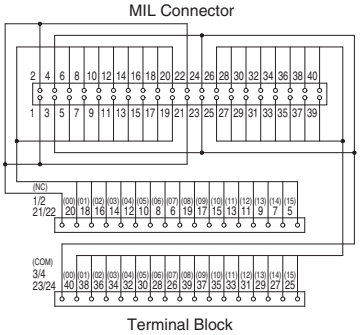

XW2R-J34GD-C3

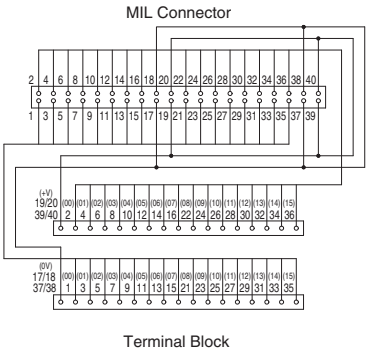

XW2R-J34GD-C4

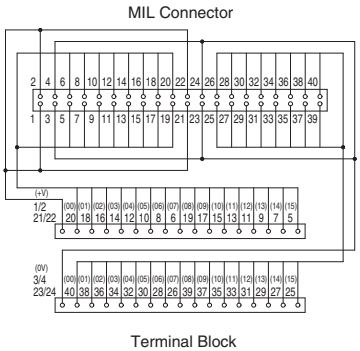

Label Contents

XW2R-J34GD-C1, XW2R-J34GD-C2

NC m+1	00	01	02	03	04	05	06	07	08	09	10	11	12	13	14	15																	
COM m	00	01	02	03	04	05	06	07	08	09	10	11	12	13	14	15																	

XW2R-J34GD-C3, XW2R-J34GD-C4

+V m+1	00	01	02	03	04	05	06	07	08	09	10	11	12	13	14	15																	
0V m	00	01	02	03	04	05	06	07	08	09	10	11	12	13	14	15																	

Models for Connection to OMRON PLCs without power supply terminals

Slotted screw (rise up)

Ordering Information

Appearance	I/O Points (Number of poles)	Model
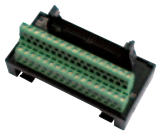	32 (34)	XW2R-E34GD-C1
		XW2R-E34GD-C2
		XW2R-E34GD-C3
		XW2R-E34GD-C4

Ratings and Specifications

Rated current		0.5 A/signal, 4 A/common
Rated voltage		24VDC
Insuration resistance		100MΩ min. (at 500VDC)
Dielectric strength		500VAC for 1 min (leakage current: 1 mA max.)
Ambient operating temperature		0 to 55°C
Appli cable wires	**Applicable wire sizes**	AWG 22 to 16 (ferrules) AWG 26 to 16 (stranded or solid wires)
	Stripped length	7 mm
	Tightening	0.5 to 0.6 N·m

Details on Crimp Terminals

Applicable crimp terminals		Applicable wires
Rod	TC-05 Dia. = 1	AWG22 to AWG18 (0.30 to 0.75 mm²)
	TC-1.25S Dia. = 1.5	AWG22 to AWG16 (0.30 to 1.25 mm²)
Blade	BT1.25-9-1 BT1.25-10-1 W = 2.2	AWG22 to AWG16 (0.30 to 1.25 mm²)

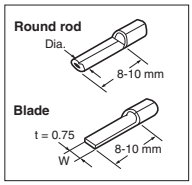

Note: Round rod and blade crimp terminals are made by Nichifu.

Dimensions

(Unit: mm)

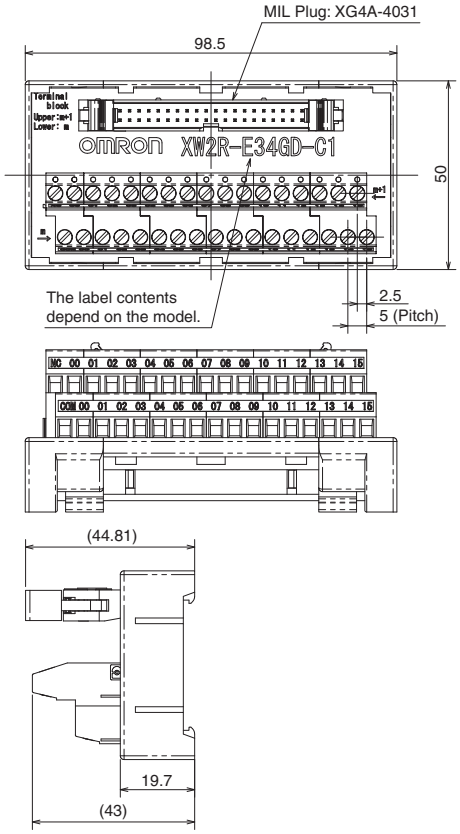

Wiring Diagram

XW2R-E34GD-C1

MIL Connector

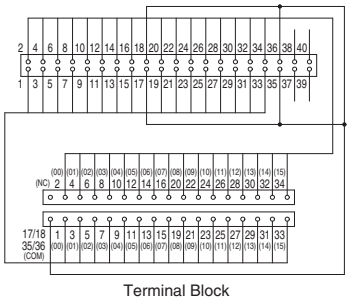

Terminal Block

XW2R-E34GD-C2

MIL Connector

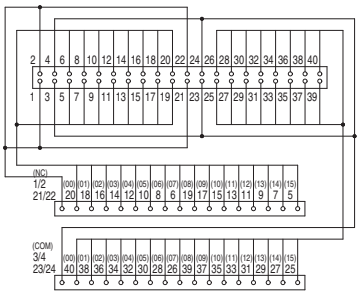

Terminal Block

XW2R-E34GD-C3

MIL Connector

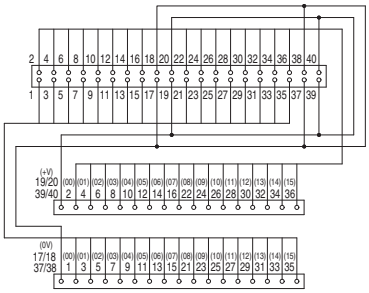

Terminal Block

XW2R-E34GD-C4

MIL Connector

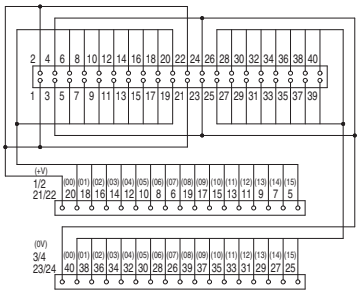

Terminal Block

Label Contents

XW2R-E34GD-C1, XW2R-E34GD-C2

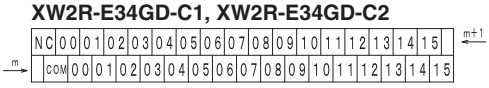

XW2R-E34GD-C3, XW2R-E34GD-C4

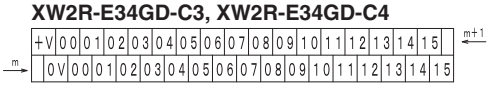

Models for Connection to OMRON PLCs without power supply terminals

Push-in spring

Ordering Information

Appearance	I/O Points (Number of poles)	Model
	32 (34)	XW2R-P34GD-C1
		XW2R-P34GD-C2
		XW2R-P34GD-C3
		XW2R-P34GD-C4

Ratings and Specifications

Rated current		0.5 A/signal, 4 A/common
Rated voltage		24VDC
Insuration resistance		100MΩ min. (at 500VDC)
Dielectric strength		500VAC for 1 min (leakage current: 1 mA max.)
Ambient operating temperature		0 to 55°C
Applicable wires	**Applicable wire sizes**	AWG 24 to 14 (ferrules) AWG 28 to 14 (stranded or solid) (Outer diameter of insulation must be 4 mm max)
	Stripped length	AWG28-16: 8 to 10 mm AWG14: 9 to 10 mm

Details on Crimp Terminals

Applicable Ferrules

- Use ferrules of the lengths and thicknesses specified below.If other lengths or thicknesses are used, connection maynot be possible or it may not be possible to insert or remove the posts.

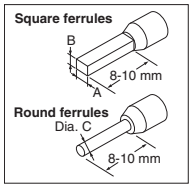

Ferrule Dimensions

Square ferrules	**Dimension A (Width)**	2.7 mm max.	The cross-sectional area after crimping must be 4.8 mm² or less
	Dimension B (Height)	2 mm max.	
Round ferrules	**Dimension C (Diameter)**	2 mm dia. max. (after crimping)	

Refer to page 46 for information on Square/Round ferrule and use tool.

Dimensions

(Unit: mm)

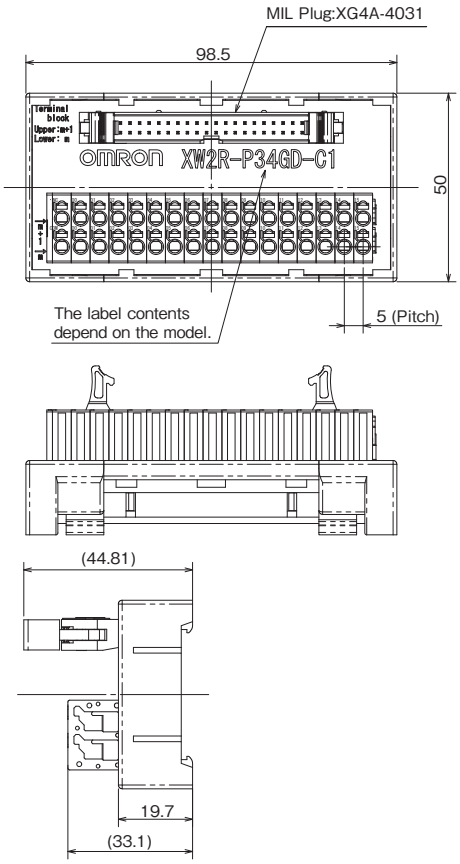

Wiring Diagram

XW2R-P34GD-C1

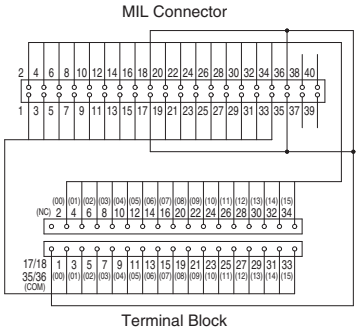

XW2R-P34GD-C2

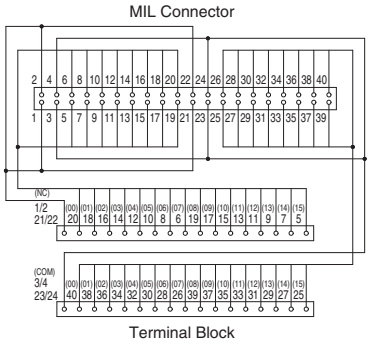

XW2R-P34GD-C3

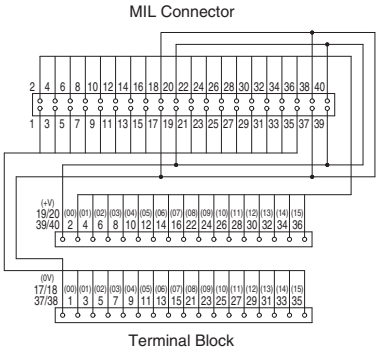

XW2R-P34GD-C4

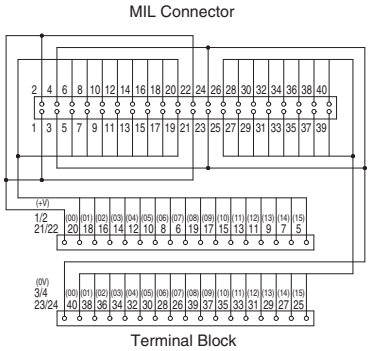

Label Contents

XW2R-P34GD-C1, XW2R-P34GD-C2

m+1	NC	00	01	02	03	04	05	06	07	08	09	10	11	12	13	14	15			
m	COM	00	01	02	03	04	05	06	07	08	09	10	11	12	13	14	15			

XW2R-P34GD-C3, XW2R-P34GD-C4

m+1	+V	00	01	02	03	04	05	06	07	08	09	10	11	12	13	14	15			
m	0V	00	01	02	03	04	05	06	07	08	09	10	11	12	13	14	15			

Models for Connection to Mitsubishi PLCs with power supply terminals

Model List

XW2R - □ 32 G D - M□ - COM

Wiring method	
P	Push-in spring
G	MIL Connector

I/O Points	
32	32 Points

Mounted Connector type	
G	MIL (XG4A)

Mounting method	
D	DIN Track mounting

PLC type	
M1	Refer to the following table for details.
M2	

Power supply terminals	
COM	Provided

Models for Connection to Mitsubishi PLCs

I/O Points	Mitsubishi PLC Module model	Models that connect to PLCs	Connecting cables *
32	LX41C4	XW2R-P32GD-M1-COM: 1 pcs	XW2Z-□□□B: 1 Cable, or XW2Z-□□□□BF-L: 1 Cable
	QX41		
	QX41-S1		
	QX41-S2		
	QX71		
	QH42P (Input)		
	QX41Y41P (Input)		
64	LX42C4	XW2R-P32GD-M1-COM: 2 pcs	XW2Z-□□□B: 2 Cables, or XW2Z-□□□□BF-L: 2 Cables
	QX42		
	QX42-S1		
	QX82		
	QX82-S1		
32	LY41NT1P	XW2R-P32GD-M2-COM: 1 pcs	XW2Z-□□□B: 1 Cable, or XW2Z-□□□□BF-L: 1 Cable
	QY41P		
	QY71		
	QH42P (Output)		
	QX41Y41P (Output)		
64	LY42NT1P	XW2R-P32GD-M2-COM: 2 pcs	XW2Z-□□□B: 2 Cables, or XW2Z-□□□□BF-L: 2 Cables
	QY42P		
	QY82P		

* □□□□ is replaced by the cable length.

Note: This Connector-Terminal Block Conversion Unit is for NPN. For PNP, reverse the polarity of the external power supply and I/O on the Connector-Terminal Block Conversion Unit.

XW2Z-□□□B, XW2Z-□□□□BF-L
Connectors: One 40-pin Connector Made by Fujitsu Component, Ltd. to One 40-pin MIL Connector

Appearance	Cable length L (m)	With shield Model	Without shield Model
	0.5	XW2Z-050B	XW2Z-0050BF-L
	1	XW2Z-100B	XW2Z-0100BF-L
	1.5	XW2Z-150B	XW2Z-0150BF-L
	2	XW2Z-200B	XW2Z-0200BF-L
	3	XW2Z-300B	XW2Z-0300BF-L
	5	XW2Z-500B	XW2Z-0500BF-L
	7	XW2Z-700B	XW2Z-0700BF-L
	10	XW2Z-010B	XW2Z-1000BF-L
	15	XW2Z-15MB	---
	20	XW2Z-20MB	---

Cable length L (m)

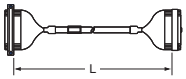

Wiring Diagram

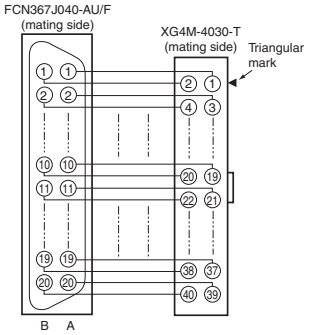

Models for Connection to Mitsubishi PLCs with power supply terminals

MIL Connector

Models for Connection to Mitsubishi PLCs

I/O Points	Model	Models that connect to PLCs	Connecting cables*
32	QX41, QX41-S1, QX41-S2, QX71	XW2R-G32GD-M1-COM: 1 pcs	Connection A XW2Z-□□□B: 1 Cable, or XW2Z-□□□□BF-L: 1 Cable Connection B XW2Z-□□□AA: 4 Cables
	QH42P(Input) , QX41Y41P (Input)		
	LX41C4		
64	QX42, QX42-S1, QX82, QX82-S1	XW2R-G32GD-M1-COM: 2 pcs	Connection A XW2Z-□□□B: 2 Cables, or XW2Z-□□□□BF-L: 2 Cables Connection B XW2Z-□□□AA: 8 Cables
	LX42C4		

* □□□□ is replaced by the cable length.

Note: Refer to page 23 for information on the XW2Z-□□□B and XW2Z-□□□□BF-L.
This Connector-Terminal Block Conversion Unit is for NPN. For PNP, reverse the polarity of the external power supply and I/O on the Connector-Terminal Block Conversion Unit.

XW2Z-□□□AA One 14-pin MIL Connector to One 14-pin MIL Connector

Appearance	Cable length L (m)	With shield Model
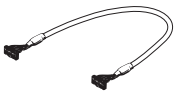	0.5	**XW2Z-050AA**
	1	**XW2Z-100AA**
	2	**XW2Z-200AA**
	5	**XW2Z-500AA**
	10	**XW2Z-010AA**

Cable length L (m)

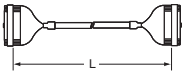

Wiring Diagram

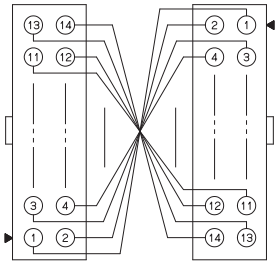

Note: Wire the connector terminals 1:1 so that the connector terminal numbers coincide.

Connection Examples

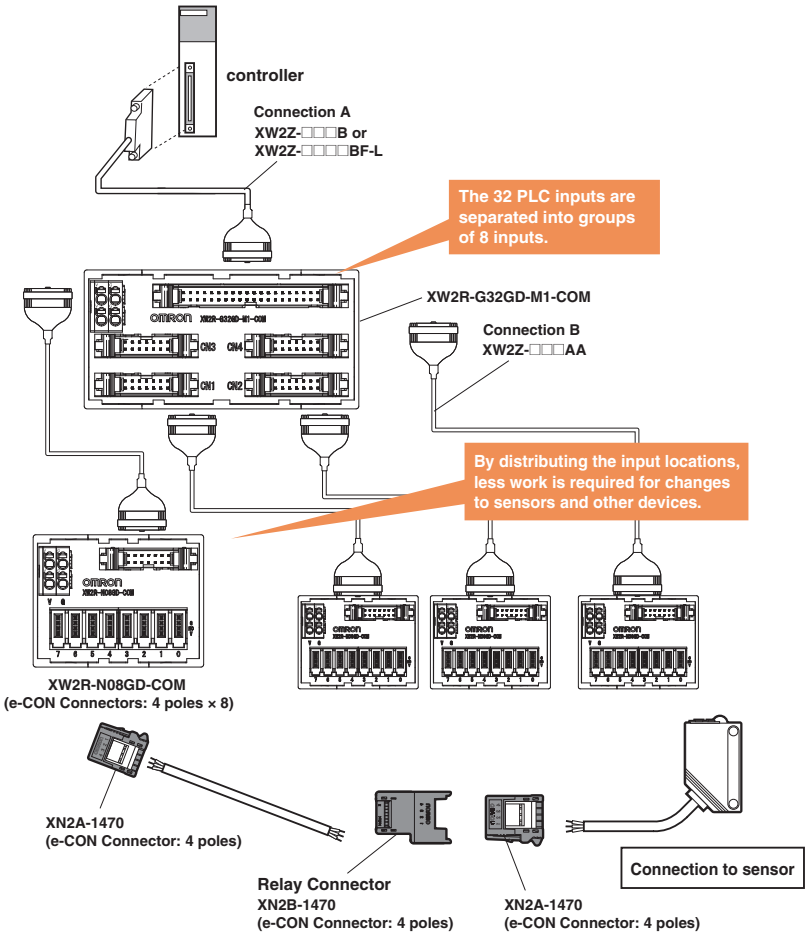

Models for Connection to Mitsubishi PLCs with power supply terminals

Ordering Information

Appearance	Model	Number of poles
	**XW2R-G32GD-M1-COM**	40 poles x 1 point 14 poles x 4 points

Ratings and Specifications

Rated current		Power supply terminal block: 8A Connectors: 1A
Rated voltage		24VDC
Insuration resistance		100MΩ min. (at 500VDC)
Dielectric strength		500VAC for 1 min (leakage current: 1 mA max.)
Ambient operating temperature		0 to 55°C
Applicable wires	**Applicable wire sizes**	AWG 24 to 14 (ferrules) AWG 28 to 14 (stranded wires) AWG 28 to 16 (solid wires) (Outer diameter of insulation must be 4 mm max)
	Stripped length	AWG28-16: 8 to 10 mm, AWG14: 9 to 10 mm

Wiring Diagram

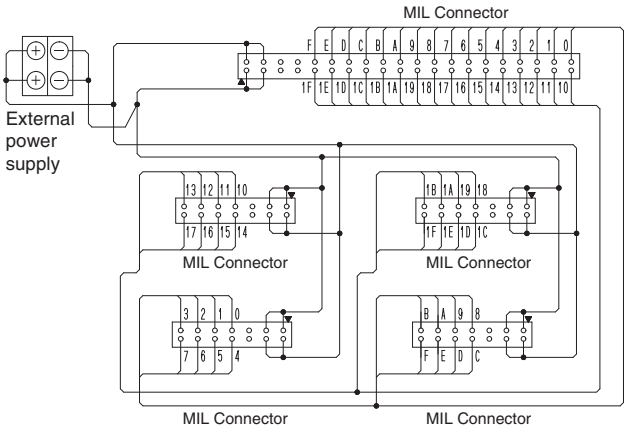

Dimensions

(Unit: mm)

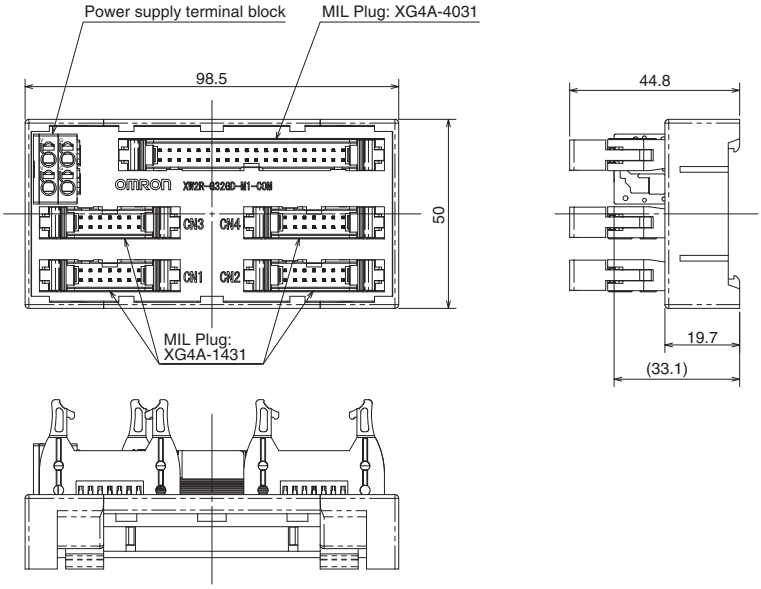

Models for Connection to Mitsubishi PLCs with power supply terminals

Ordering Information

Appearance	I/O Points	Number of poles (PLC end)	I/O	Model	Mounted Connector model	Cable Connector model
	8 points	14 poles	Input	**XW2R-N08GD-COM**	XG4A-1431 (PLC end) XN2D-4471 (for input)	XG4M-1430-T (PLC end) XN2A-1470 (for input)

Ratings and Specifications

Rated current		Power supply terminal block: 2A Connectors/e-CON Connectors: 1 A (However, rated current of e-CON Connector depends on the wires that are used.)
Rated voltage		24VDC
Insuration resistance		100MΩ min. (at 500VDC)
Dielectric strength		500VAC for 1 min (leakage current: 1 mA max.)
Ambient operating temperature		0 to 55°C
Applicable wires	**Applicable wire sizes** *	AWG 24 to 14 (ferrules), AWG 28 to 14 (stranded wires), AWG 28 to 16 (solid wires) (Outer diameter of insulation must be 4 mm max)
	Stripped length	AWG28-16: 8 to 10 mm, AWG14: 9 to 10 mm

* This is the applicable range for the power supply terminal block. For the applicable wire sizes for I/O Connectors (e-CON), refer to page 37.

Refer to page 37 for the recommended e-CON Connectors.

Wiring Diagram

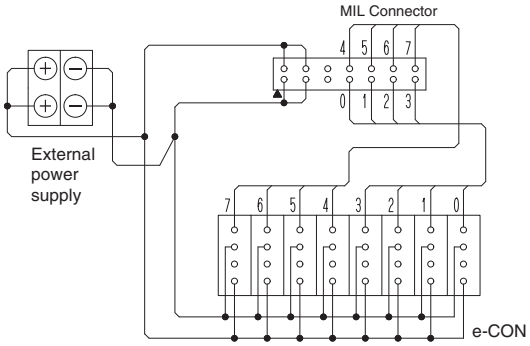

(This connection diagram is for combining with CN1 on the XW2R-G32GD-M1-COM.)

Dimensions

(Unit: mm)

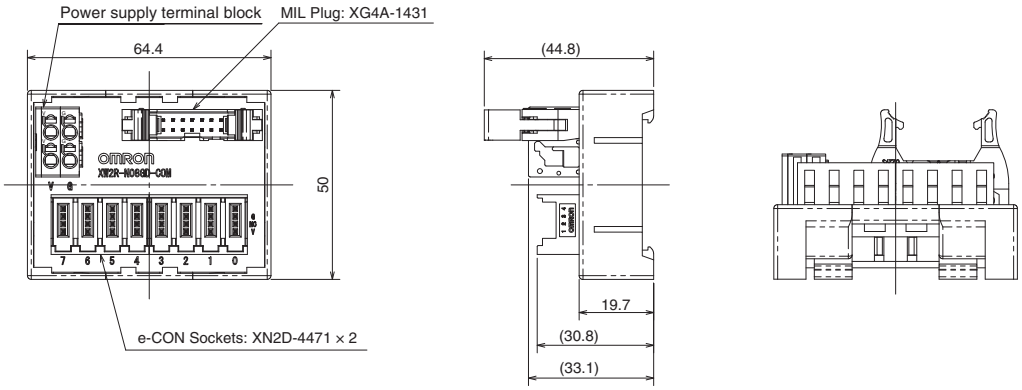

The e-CON address assignments are for combining the XW2R-G32GD-M1-COM with four XW2R-N08GD-COM.

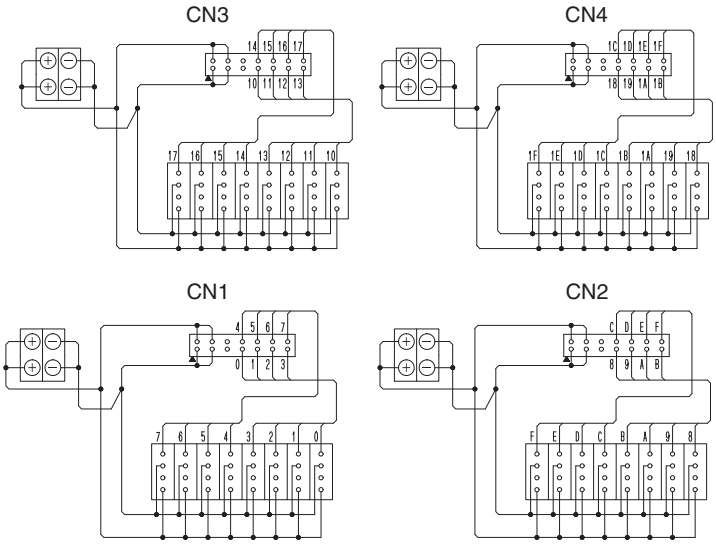

Models for Connection to Mitsubishi PLCs with power supply terminals

Push-in spring

Ordering Information

Appearance	I/O Points	Input/Output	Model
	32 points	Input	**XW2R-P32GD-M1-COM**
		Output	**XW2R-P32GD-M2-COM**

Ratings and Specifications

Rated current		1 A/signal, 8 A/common
Rated voltage		24VDC
Insuration resistance		100MΩ min. (at 500VDC)
Dielectric strength		500VAC for 1 min (leakage current: 1 mA max.)
Ambient operating temperature		0 to 55°C
Appli cable wires	**Applicable wire sizes**	AWG 24 to 14 (ferrules) AWG 28 to 14 (stranded or solid) (Outer diameter of insulation must be 4 mm max)
	Stripped length	AWG28-16: 8 to 10 mm AWG14: 9 to 10 mm

Details on Crimp Terminals

Applicable Ferrules

- Use ferrules of the lengths and thicknesses specified below.If other lengths or thicknesses are used, connection maynot be possible or it may not be possible to insert or remove the posts.

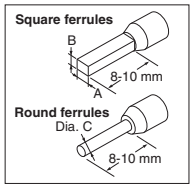

- Ferrule Dimensions

Square ferrules	**Dimension A (Width)**	2.7 mm max.	The cross-sectional area after crimping must be 4.8 mm² or less
	Dimension B (Height)	2 mm max.	
Round ferrules	**Dimension C (Diameter)**	2 mm dia. max. (after crimping)	

Refer to page 46 for information on Square/Round ferrule and use tool.

Dimensions

(Unit: mm)

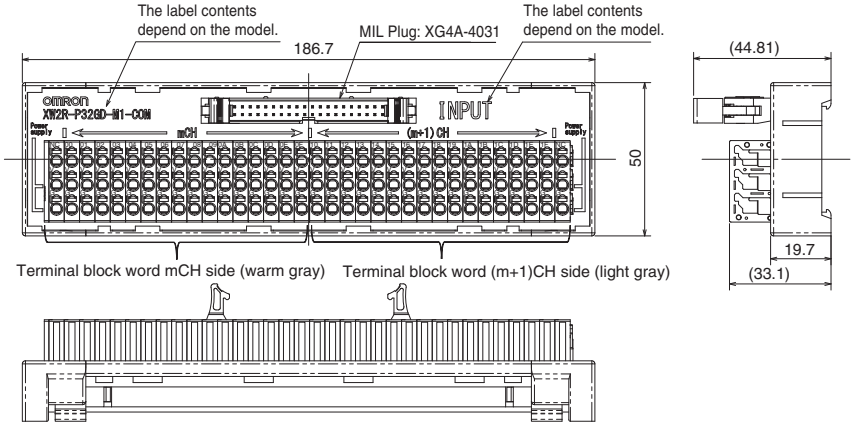

Wiring Diagram

XW2R-P32GD-M1-COM

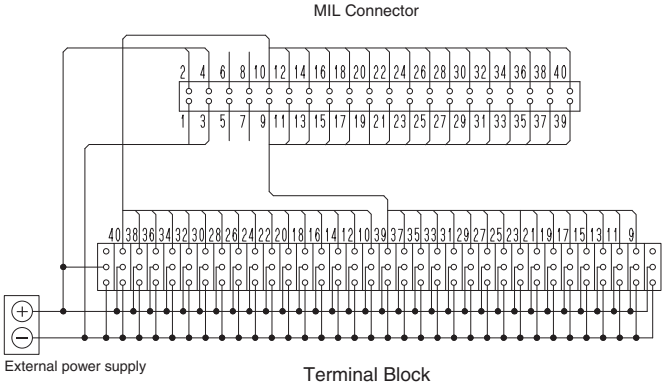

XW2R-P32GD-M2-COM

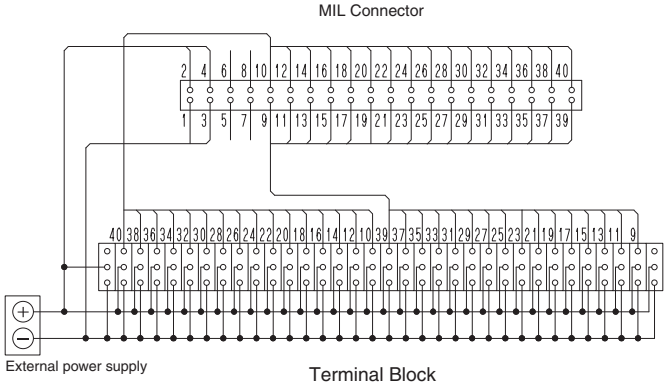

Label Contents

XW2R-P32GD-M1-COM, XW2R-P32GD-M2-COM

	mCH																	(m+1)CH																
Row 1	NC	00	01	02	03	04	05	06	07	08	09	0A	0B	0C	0D	0E	0F	10	11	12	13	14	15	16	17	18	19	1A	1B	1C	1D	1E	1F	NC
Row 2	V	V	V	V	V	V	V	V	V	V	V	V	V	V	V	V	V	V	V	V	V	V	V	V	V	V	V	V	V	V	V	V	V	V
Row 3	G	G	G	G	G	G	G	G	G	G	G	G	G	G	G	G	G	G	G	G	G	G	G	G	G	G	G	G	G	G	G	G	G	G

Models for Connection to Mitsubishi PLCs without power supply terminals

Model List

XW2R - □ 34 G D - M □

Wiring method	
J	Phillips screw
E	Slotted screw (rise up)
P	Push-in spring

Number of poles	
34	34 poles (I/O points: 32 points)

Mounted Connector type	
G	MIL (XG4A)

Mounting method	
D	DIN Track mounting

PLC Type	
M1	Refer to the following table for details.
M2	

Models for Connection to Mitsubishi PLCs

PLC Type	I/O Points	Mitsubishi PLC Module model	Models that connect to PLCs *1	Connecting cables *2
M1	32	LX41C4	XW2R-□34GD-M1: 1 pcs	XW2Z-□□□B: 1 Cable, or XW2Z-□□□BF-L: 1 Cable
		QX41		
		QX41-S1		
		QX41-S2		
		QX71		
		QH42P (Input)		
		QX41Y41P (Input)		
	64	LX42C4	XW2R-□34GD-M1: 2 pcs	XW2Z-□□□B: 2 Cables, or XW2Z-□□□□BF-L: 2 Cables
		QX42		
		QX42-S1		
		QX82		
		QX82-S1		
M2	32	LY41NT1P	XW2R-□34GD-M2: 1 pcs	XW2Z-□□□B: 1 Cable, or XW2Z-□□□□BF-L: 1 Cable
		QY41P		
		QY71		
		QH42P (Output)		
		QX41Y41P (Output)		
	64	LY42NT1P	XW2R-□34GD-M2: 2 pcs	XW2Z-□□□B: 2 Cables, or XW2Z-□□□□BF-L: 1 Cable
		QY42P		
		QY82P		

*1 Replace the box (□) with the wiring method code (J, E, or P).
*2 □□□□ is replaced by the cable length.

XW2Z-□□□B, XW2Z-□□□□BF-L
Connectors: One 40-pin Connector Made by Fujitsu Component, Ltd. to One 40-pin MIL Connector

Appearance	Cable length L (m)	With shield Model	With shield Model
	0.5	**XW2Z-050B**	**XW2Z-0050BF-L**
	1	**XW2Z-100B**	**XW2Z-0100BF-L**
	1.5	**XW2Z-150B**	**XW2Z-0150BF-L**
	2	**XW2Z-200B**	**XW2Z-0200BF-L**
	3	**XW2Z-300B**	**XW2Z-0300BF-L**
	5	**XW2Z-500B**	**XW2Z-0500BF-L**
	7	**XW2Z-700B**	**XW2Z-0700BF-L**
	10	**XW2Z-010B**	**XW2Z-1000BF-L**
	15	**XW2Z-15MB**	---
	20	**XW2Z-20MB**	---

Cable length L (m)

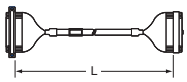

Wiring Diagram

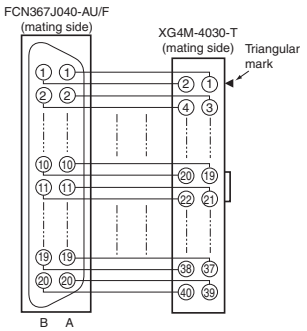

Models for Connection to Mitsubishi PLCs without power supply terminals

Phillips screw

Ordering Information

Appearance	I/O Points (Number of poles)	Model
	32 (34)	XW2R-J34GD-M1
		XW2R-J34GD-M2

Ratings and Specifications

Rated current		0.5 A/signal, 2 A/common
Rated voltage		24VDC
Insuration resistance		100MΩ min. (at 500VDC)
Dielectric strength		500VAC for 1 min (leakage current: 1 mA max.)
Ambient operating temperature		0 to 55°C
Applicable wires	**Applicable wire sizes**	AWG 22 to 16 (round or forked crimp terminals) AWG 26 to 16 (stranded or solid wires)
	Stripped length	9 mm
	Tightening	0.5 N·m

Details on Crimp Terminals

Wiring Terminal Blocks

- Using Crimp Terminals (With a Terminal Block with M3 Screws)

Terminal Screw Tightening Torque

- Use a tightening torque of 0.5 N·m when connecting wires or crimp terminals to the terminal block.

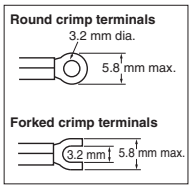

Applicable crimp terminals		Applicable wires
Round crimp terminals	1.25-3	AWG 22 to 16 (0.30 to 1.25 mm²)
Forked crimp terminals	1.25Y-3	AWG 22 to 16 (0.30 to 1.25 mm²)

Dimensions

(Unit: mm)

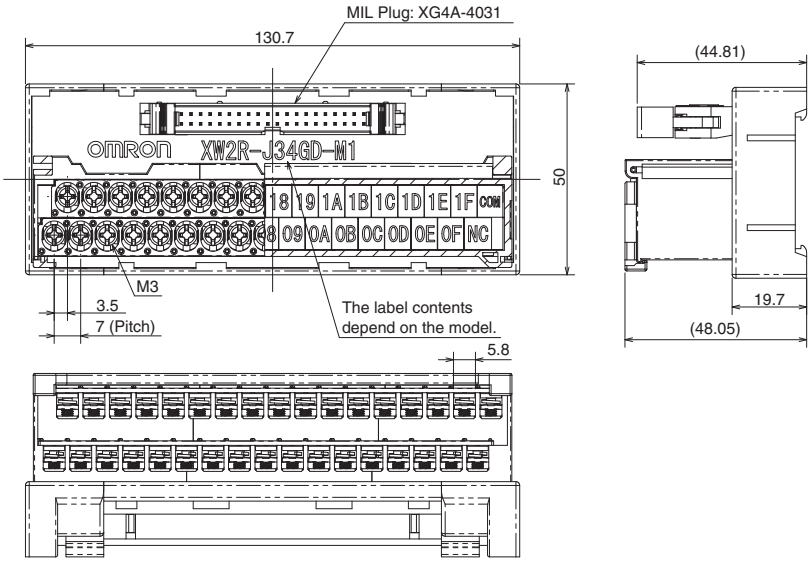

Wiring Diagram

XW2R-J34GD-M1

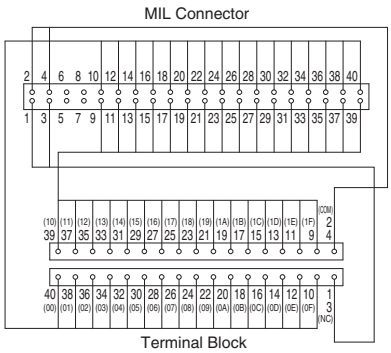

XW2R-J34GD-M2

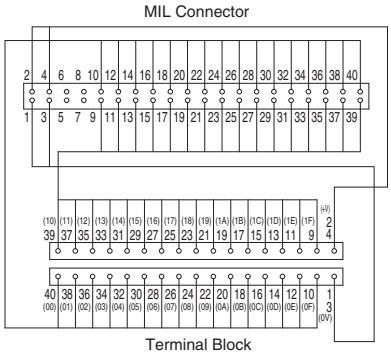

Label Contents

XW2R-J34GD-M1

	10	11	12	13	14	15	16	17	18	19	1A	1B	1C	1D	1E	1F	COM								
00	01	02	03	04	05	06	07	08	09	0A	0B	0C	0D	0E	0F	NC									

XW2R-J34GD-M2

	10	11	12	13	14	15	16	17	18	19	1A	1B	1C	1D	1E	1F	+V								
00	01	02	03	04	05	06	07	08	09	0A	0B	0C	0D	0E	0F	0V									

Models for Connection to Mitsubishi PLCs without power supply terminals

Slotted screw (rise up)

Ordering Information

Appearance	I/O Points (Number of poles)	Model
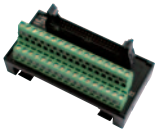	32 (34)	XW2R-E34GD-M1
		XW2R-E34GD-M2

Ratings and Specifications

Rated current		0.5 A/signal, 2 A/common
Rated voltage		24VDC
Insuration resistance		100MΩ min. (at 500VDC)
Dielectric strength		500VAC for 1 min (leakage current: 1 mA max.)
Ambient operating temperature		0 to 55°C
Applicable wires	**Applicable wire sizes**	AWG 22 to 16 (ferrules) AWG 26 to 16 (stranded or solid wires)
	Stripped length	7 mm
	Tightening	0.5 to 0.6 N·m

Details on Crimp Terminals

Applicable crimp terminals		Applicable wires
Rod	TC-05 Dia. = 1	AWG22 to AWG18 (0.30 to 0.75 mm²)
	TC-1.25S Dia. = 1.5	AWG22 to AWG16 (0.30 to 1.25 mm²)
Blade	BT1.25-9-1 BT1.25-10-1 W = 2.2	AWG22 to AWG16 (0.30 to 1.25 mm²)

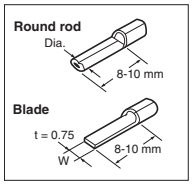

Note: Round rod and blade crimp terminals are made by Nichifu.

Dimensions

(Unit: mm)

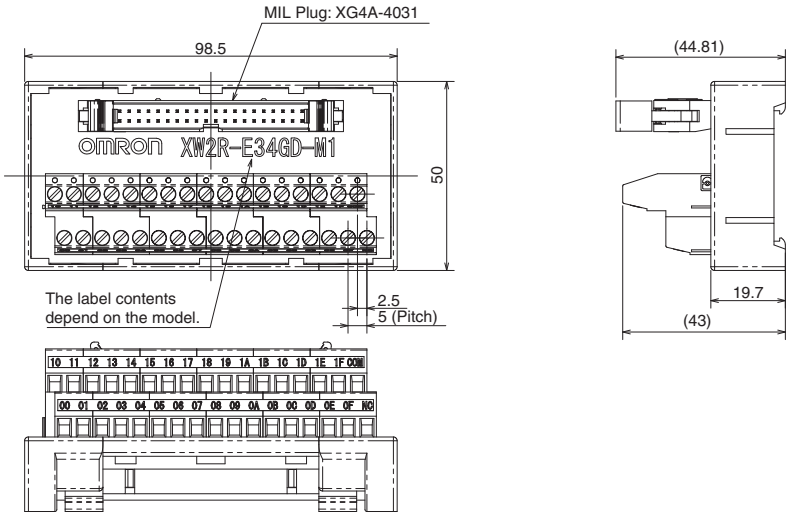

Wiring Diagram

XW2R-E34GD-M1

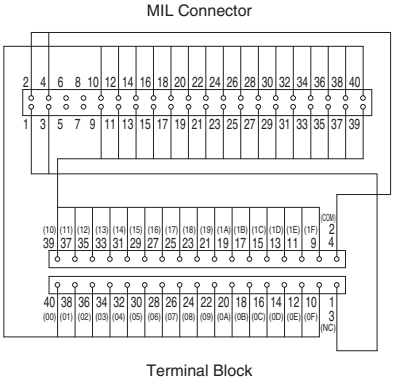

XW2R-E34GD-M2

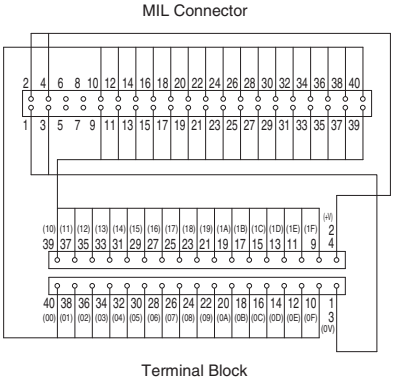

Label Contents

XW2R-E34GD-M1

10		11		12		13		14		15		16		17		18		19		1A		1B		1C		1D		1E		1F		COM			
	00		01		02		03		04		05		06		07		08		09		0A		0B		0C		0D		0E		0F		NC		

XW2R-E34GD-M2

10		11		12		13		14		15		16		17		18		19		1A		1B		1C		1D		1E		1F		+V			
	00		01		02		03		04		05		06		07		08		09		0A		0B		0C		0D		0E		0F		0V		

Models for Connection to Mitsubishi PLCs without power supply terminals

Push-in spring

Ordering Information

Appearance	I/O Points (Number of poles)	Model
	32 (34)	XW2R-P34GD-M1
		XW2R-P34GD-M2

Ratings and Specifications

Rated current		0.5 A/signal, 2 A/common
Rated voltage		24VDC
Insuration resistance		100MΩ min. (at 500VDC)
Dielectric strength		500VAC for 1 min (leakage current: 1 mA max.)
Ambient operating temperature		0 to 55°C
Applicable wires	**Applicable wire sizes**	AWG 24 to 14 (ferrules) AWG 28 to 14 (stranded or solid) (Outer diameter of insulation must be 4 mm max)
	Stripped length	AWG28-16: 8 to 10 mm AWG14: 9 to 10 mm

Details on Crimp Terminals

Applicable Ferrules

- Use ferrules of the lengths and thicknesses specified below.If other lengths or thicknesses are used, connection maynot be possible or it may not be possible to insert or remove the posts.

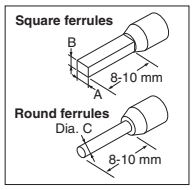

Ferrule Dimensions

Square ferrules	**Dimension A (Width)**	2.7 mm max.	The cross-sectional area after crimping must be 4.8 mm² or less
	Dimension B (Height)	2 mm max.	
Round ferrules	**Dimension C (Diameter)**	2 mm dia. max. (after crimping)	

Refer to page 46 for information on Square/Round ferrule and use tool.

Dimensions

(Unit: mm)

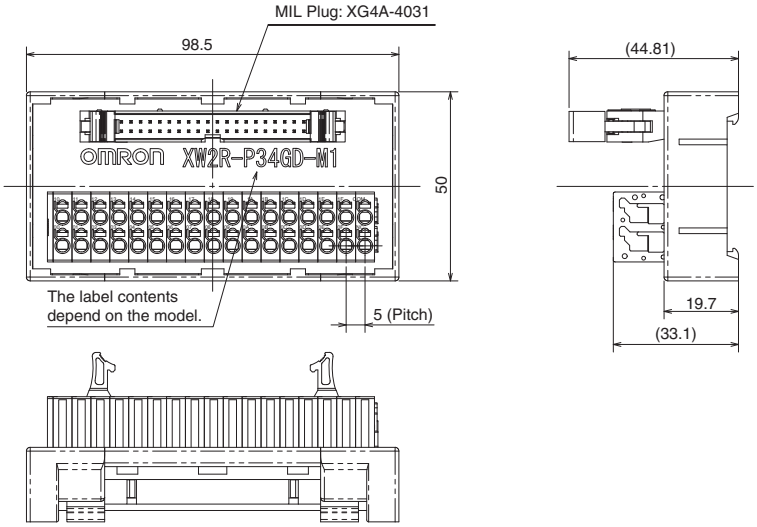

Wiring Diagram

XW2R-P34GD-M1

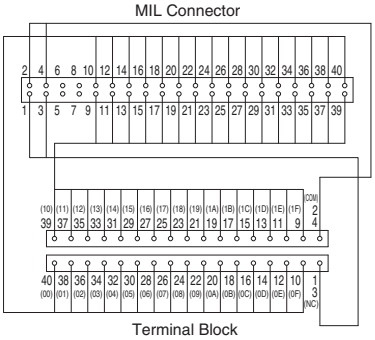

XW2R-P34GD-M2

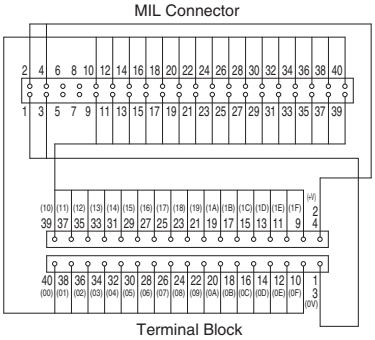

Label Contents

XW2R-P34GD-M1

10	11	12	13	14	15	16	17	18	19	1A	1B	1C	1D	1E	1F	COM															
00	01	02	03	04	05	06	07	08	09	0A	0B	0C	0D	0E	0F	NC															

XW2R-P34GD-M2

10	11	12	13	14	15	16	17	18	19	1A	1B	1C	1D	1E	1F	+V															
00	01	02	03	04	05	06	07	08	09	0A	0B	0C	0D	0E	0F	0V															

Models for Keyence PLCs with power supply terminals

Model List

XW2R - P 32 G D - K1 - COM

Wiring method		I/O Points		Mounted Connector type		Mounting method		PLC Type		Power supply terminals	
P	Push-in spring	32	32 Points	G	MIL (XG4A)	D	DIN Track mounting	K1	Refer to the following table for details.	COM	Provided

Models for Keyence PLCs

I/O	I/O Points	Unit	Models for Keyence PLCs	Models that connect to PLCs	Connecting cables*
Input	32	Input Unit Model	KV-C32XA, KV-C32XC	XW2R-P32GD-K1-COM:1 pcs	XW2Z-□□□EE: 1 Cable, or XW2Z-□□□□EE-L: 1 Cable
	64		KV-C64XA, KV-C64XB, KV-C64XC	XW2R-P32GD-K1-COM:2 pcs	XW2Z-□□□EE: 2 Cables, or XW2Z-□□□□EE-L: 2 Cables

* □□□□ is replaced by the cable length.

Note: This Connector-Terminal Block Conversion Unit is for NPN. For PNP, reverse the polarity of the external power supply and I/O on the Connector-Terminal Block Conversion Unit.

XW2Z-□□□EE, XW2Z-□□□EE-L
Connectors: One 34-pin MIL Connector to One 34-pin MIL Connector

Appearance	Cable length L (m)	With shield Model	Without shield Model
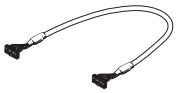	0.5	**XW2Z-050EE**	**XW2Z-0050EE-L**
	1	**XW2Z-100EE**	**XW2Z-0100EE-L**
	1.5	**XW2Z-150EE**	**XW2Z-0150EE-L**
	2	**XW2Z-200EE**	**XW2Z-0200EE-L**
	3	**XW2Z-300EE**	**XW2Z-0300EE-L**
	5	**XW2Z-500EE**	**XW2Z-0500EE-L**
	7	---	**XW2Z-0700EE-L**
	10	---	**XW2Z-1000EE-L**

Cable length L (m)

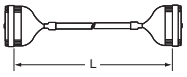

Wiring Diagram

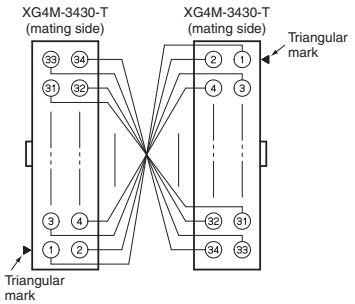

Note: Wire the connector terminals 1:1 so that the connector terminal numbers coincide.

Models for Keyence PLCs with power supply terminals

Push-in spring

Ordering Information

Appearance	I/O Points	Model
	32	**XW2R-P32GD-K1-COM**

Ratings and Specifications

Rated current		1 A/signal, 8 A/common
Rated voltage		24VDC
Insuration resistance		100MΩ min. (at 500VDC)
Dielectric strength		500VAC for 1 min (leakage current: 1 mA max.)
Ambient operating temperature		0 to 55°C
Applicable wires	**Applicable wire sizes**	AWG 24 to 14 (ferrules) AWG 28 to 14 (stranded or solid) (Outer diameter of insulation must be 4 mm max)
	Stripped length	AWG28-16: 8 to 10 mm AWG14: 9 to 10 mm

Details on Crimp Terminals

Applicable Ferrules

- Use ferrules of the lengths and thicknesses specified below.If other lengths or thicknesses are used, connection maynot be possible or it may not be possible to insert or remove the posts.

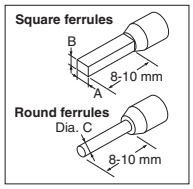

- Ferrule Dimensions

Square ferrules	**Dimension A (Width)**	2.7 mm max.	The cross-sectional area after crimping must be 4.8 mm² or less
	Dimension B (Height)	2 mm max.	
Round ferrules	**Dimension C (Diameter)**	2 mm dia. max. (after crimping)	

Refer to page 46 for information on Square/Round ferrule and use tool.

Dimensions

(Unit: mm)

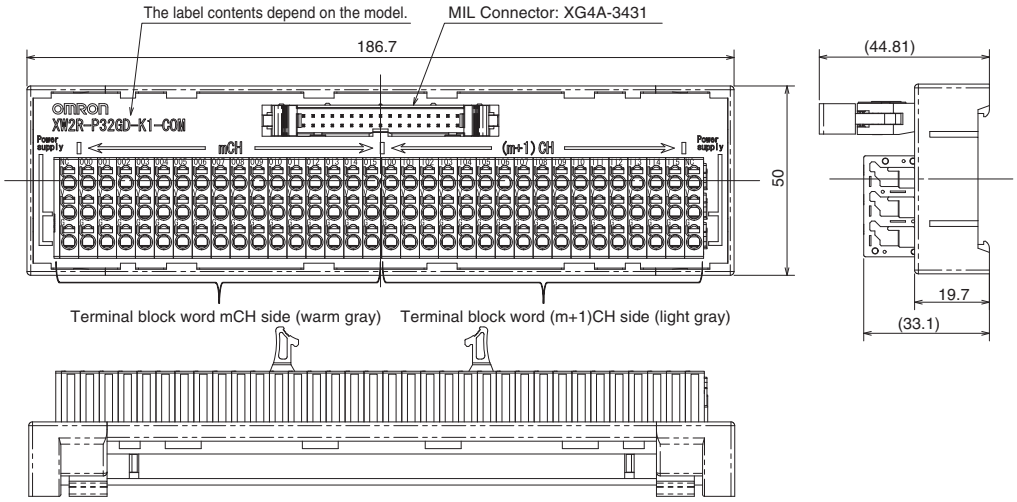

Wiring Diagram

XW2R-P32GD-K1-COM

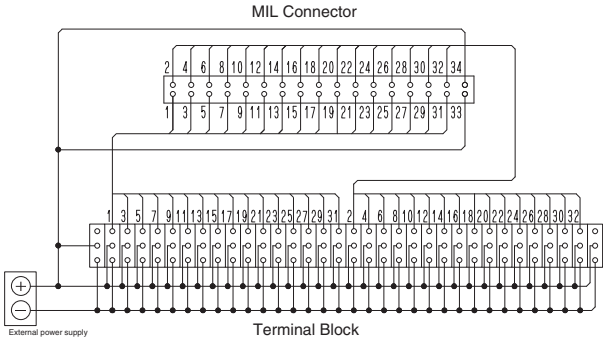

Label Contents

XW2R-P32GD-K1-COM

mCH																	(m+1)CH																
NC	000	001	002	003	004	005	006	007	008	009	010	011	012	013	014	015	100	101	102	103	104	105	106	107	108	109	110	111	112	113	114	115	NC
V	V	V	V	V	V	V	V	V	V	V	V	V	V	V	V	V	V	V	V	V	V	V	V	V	V	V	V	V	V	V	V	V	V
G	G	G	G	G	G	G	G	G	G	G	G	G	G	G	G	G	G	G	G	G	G	G	G	G	G	G	G	G	G	G	G	G	G

Models for Keyence PLCs without power supply terminals

Model List

XW2R - □ □□ G D - K□

Wiring method		Number of poles		Mounted Connector type		Mounting method		PLC Type	
J	Phillips screw	34	34 poles (I/O points: 32 points)*1	G	MIL (XG4A)	D	DIN Track mounting	K1	Refer to the following table for details.
P	Push-in spring	40	40 poles (I/O points: 36 points)*2					K2	

*1. K1 Type
*2. K2 Type

Models for Keyence PLCs

I/O	I/O Points	Unit	Models for Keyence PLCs	Models that connect to PLCs *1	Connecting cables *2
Input	32	I/O Unit Model	KV-C32XA, KV-C32XC	XW2R-□34GD-K1: 1 pcs	XW2Z-□□□EE: 1 Cable, or XW2Z-□□□□EE-L: 1 Cable
Output			KV-C32TA, KV-C32TC, KV-C32TCP		
			KV-C32TD		
I/O			KV-C32XTD		
Input	64		KV-C64XA, KV-C64XB, KV-C64XC	XW2R-□34GD-K1: 2 pcs	XW2Z-□□□EE: 2 Cables, or XW2Z-□□□□EE-L: 2 Cables
Output			KV-C64TA, KV-C64TC, KV-C64TD, KV-C64TCP		
---	---	CPU Unit Model	KV-1000, KV-3000, KV-5000, KV-5500	XW2R-□40GD-K2: 1 pcs	XW2Z-□□□K: 1 Cable, or XW2Z-□□□□FF-L: 1 Cable

***1** Replace the box (□) with the wiring method code (J or P).
***2** □□□□ is replaced by the cable length.

XW2Z-□□□EE, XW2Z-□□□□EE-L
Connectors: One 34-pin MIL Connector to One 34-pin MIL Connector

Appearance	Cable length L (m)	With shield Model	Without shield Model
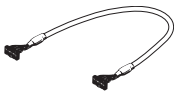	0.5	**XW2Z-050EE**	**XW2Z-0050EE-L**
	1	**XW2Z-100EE**	**XW2Z-0100EE-L**
	1.5	**XW2Z-150EE**	**XW2Z-0150EE-L**
	2	**XW2Z-200EE**	**XW2Z-0200EE-L**
	3	**XW2Z-300EE**	**XW2Z-0300EE-L**
	5	**XW2Z-500EE**	**XW2Z-0500EE-L**
	7	---	**XW2Z-0700EE-L**
	10	---	**XW2Z-1000EE-L**

Cable length L (m)

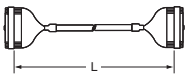

Wiring Diagram

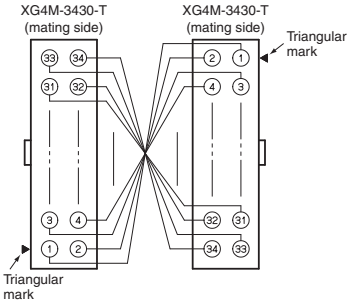

Note: Wire the connector terminals 1:1 so that the connector terminal numbers coincide.

XW2Z-□□□K, XW2Z-□□□□FF-L
Connectors: One 40-pin MIL Connector to One 40-pin MIL Connector

Appearance	Cable length L (m)	With shield Model	Without shield Model
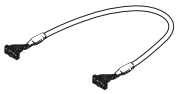	0.25	**XW2Z-C25K**	---
	0.5	**XW2Z-C50K**	**XW2Z-0050FF-L**
	1	**XW2Z-100K**	**XW2Z-0100FF-L**
	1.5	**XW2Z-150K**	**XW2Z-0150FF-L**
	2	**XW2Z-200K**	**XW2Z-0200FF-L**
	3	**XW2Z-300K**	**XW2Z-0300FF-L**
	5	**XW2Z-500K**	**XW2Z-0500FF-L**
	7	---	**XW2Z-0700FF-L**
	10	**XW2Z-010K**	**XW2Z-1000FF-L**

Cable length L (m)

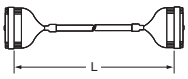

Wiring Diagram

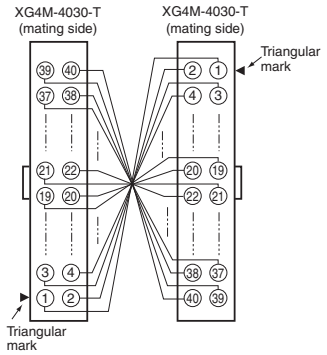

Note: Wire the connector terminals 1:1 so that the connector terminal numbers coincide.

Models for Keyence PLCs without power supply terminals

Phillips screw

Ordering Information

Appearance	I/O Points (Number of poles)	Model	Dimension A (mm)
	32 (34)	**XW2R-J34GD-K1**	130.7
	36 (40)	**XW2R-J40GD-K2**	151.7

Ratings and Specifications

Rated current		1A
Rated voltage		125 VAC/DC
Insuration resistance		100MΩ min. (at 500VDC)
Dielectric strength		500VAC for 1 min (leakage current: 1 mA max.)
Ambient operating temperature		0 to 55°C
Applicable wires	**Applicable wire sizes**	AWG 22 to 16 (round or forked crimp terminals) AWG 26 to 16 (stranded or solid wires)
	Stripped length	9 mm
	Tightening	0.5 N·m

Details on Crimp Terminals

Wiring Terminal Blocks

- Using Crimp Terminals (With a Terminal Block with M3 Screws)

Terminal Screw Tightening Torque

- Use a tightening torque of 0.5 N·m when connecting wires or crimp terminals to the terminal block.

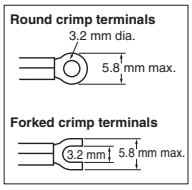

Applicable crimp terminals		Applicable wires
Round crimp terminals	1.25-3	AWG 22 to 16 (0.30 to 1.25 mm^2)
Forked crimp terminals	1.25Y-3	AWG 22 to 16 (0.30 to 1.25 mm^2)

Dimensions

(Unit: mm)

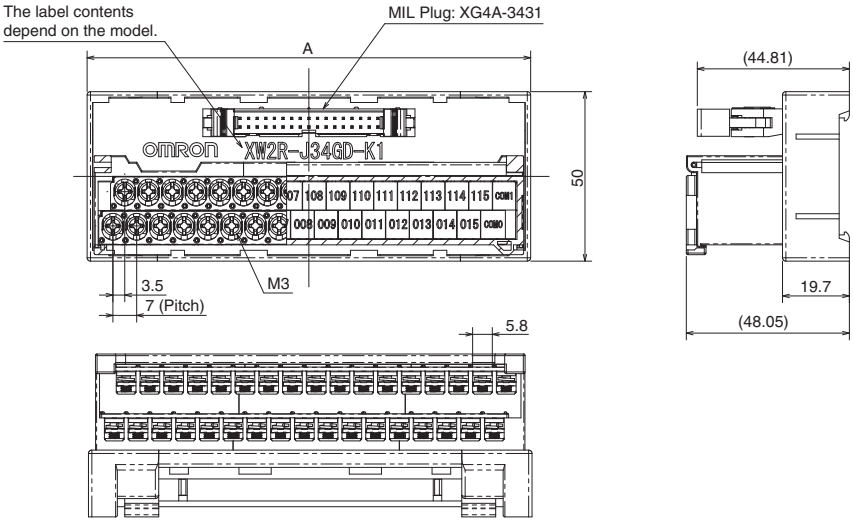

Wiring Diagram

XW2R-J34GD-K1

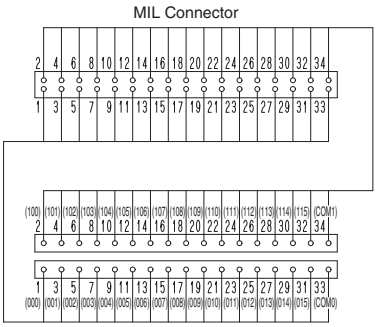

XW2R-J40GD-K2

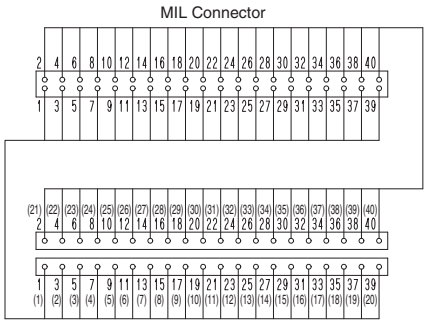

Label Contents

XW2R-J34GD-K1

100	101	102	103	104	105	106	107	108	109	110	111	112	113	114	115	COM1
000	001	002	003	004	005	006	007	008	009	010	011	012	013	014	015	COM0

XW2R-J40GD-K2

21	22	23	24	25	26	27	28	29	30	31	32	33	34	35	36	37	38	39	40
1	2	3	4	5	6	7	8	9	10	11	12	13	14	15	16	17	18	19	20

Models for Keyence PLCs without power supply terminals

Push-in spring

Ordering Information

Appearance	I/O Points (Number of poles)	Model	Dimension A (mm)
	32 (34)	**XW2R-P34GD-K1**	98.5
	36 (40)	**XW2R-P40GD-K2**	113.5

Ratings and Specifications

Rated current		1A
Rated voltage		AC/ DC125V
Insuration resistance		100MΩ min. (at 500VDC)
Dielectric strength		500VAC for 1 min (leakage current: 1 mA max.)
Ambient operating temperature		0 to 55°C
Appli cable wires	**Applicable wire sizes**	AWG 24 to 14 (ferrules), AWG 28 to 14 (stranded or solid wires) (Outer diameter of insulation must be 4 mm max)
	Stripped length	AWG28-16: 8 to 10 mm, AWG14: 9 to 10 mm

Details on Crimp Terminals

Applicable Ferrules

- Use ferrules of the lengths and thicknesses specified below.If other lengths or thicknesses are used, connection maynot be possible or it may not be possible to insert or remove the posts.

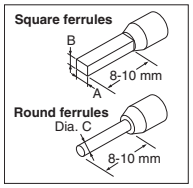

- Ferrule Dimensions

Square ferrules	**Dimension A (Width)**	2.7 mm max.	The cross-sectional area after crimping must be 4.8 mm² or less
	Dimension B (Height)	2 mm max.	
Round ferrules	**Dimension C (Diameter)**	2 mm dia. max. (after crimping)	

Refer to page 46 for information on Square/Round ferrule and use tool.

Dimensions

(Unit: mm)

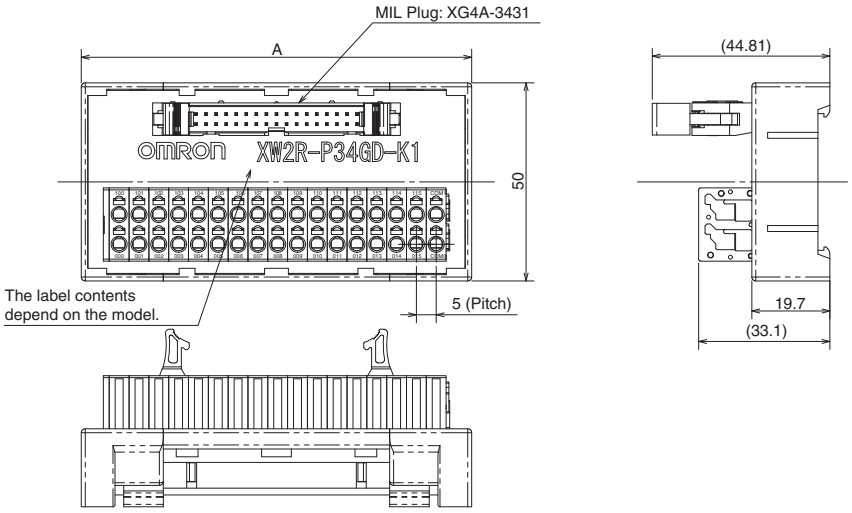

Wiring Diagram

XW2R-P34GD-K1

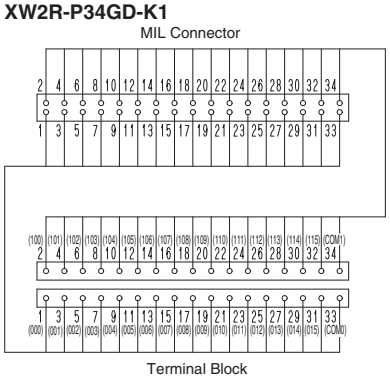

XW2R-P40GD-K2

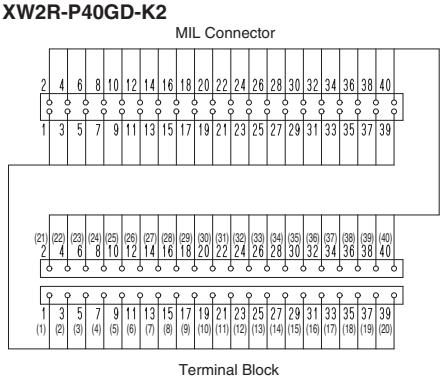

Label Contents

XW2R-P34GD-K1

100	101	102	103	104	105	106	107	108	109	110	111	112	113	114	115	COM1
000	001	002	003	004	005	006	007	008	009	010	011	012	013	014	015	COM0

XW2R-P40GD-K2

21	22	23	24	25	26	27	28	29	30	31	32	33	34	35	36	37	38	39	40
1	2	3	4	5	6	7	8	9	10	11	12	13	14	15	16	17	18	19	20

Input Device Connectors: XN2 e-CON Connectors

For Sensor

Appearance	Number of poles	Model
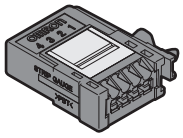	4	**XN2A-1470**

Relay Connector

Appearance	Number of poles	Model
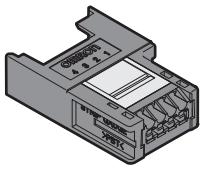	4	**XN2B-1470**

Ratings and Specifications

Rated current	3 A/pin (with AWG20 wires), 2 A/pin (with AWG22 wires), 1 A/pin (with AWG24 wires), 0.5 A/pin (with AWG26 or AWG28 wires)
Rated voltage	32 VDC
Contact resistance	30 mΩ max. (at 20 mV, 100 mA max.)
Insuration resistance	10^3 MΩ min. (at 500VDC)
Dielectric strength	1,000 VAC for 60 sec (leakage current: 1 mA max.)
Insertion durability	50 times
Ambient operating temperature	-30 to 75°C ∗
Applicable wires	Stranded wire 0.08mm^2 (AWG28) to 0.5mm^2 (AWG20) (Outer diameter of insulation must be 1.5 mm max)

∗ The operating temperature range is restricted by the maximum operating temperature of the cable.

Wiring Procedure

Wire Preparation

Use the strip gauge on the front panel and strip 7 to 8 mm of the insulation. If you use stranded wires, twist them several times.

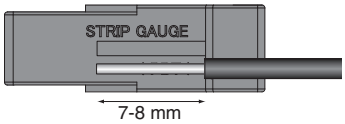

Connection Procedure

1. Press a flat-blade screwdriver into the operation hole until the operation lever locks into place.

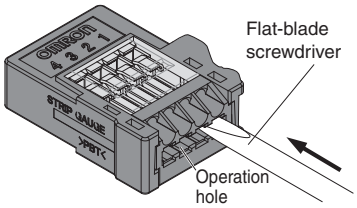

2. Insert the wire all the way into the wire insertion hole. Confirm that the insulation on the wire also enters the wire insertion hole and that the end of the wire has passed through the connection section.

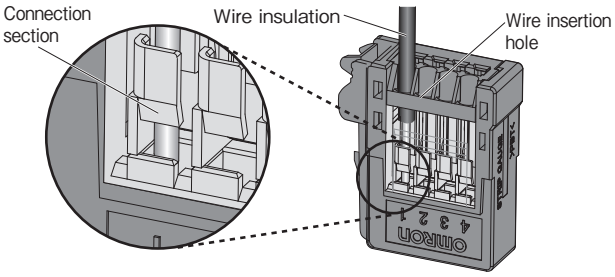

3. Insert a flat-blade screwdriver into the release hole and gently reset the lever. You should hear the operation lever reset.

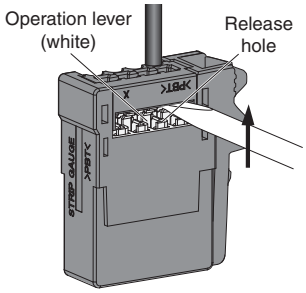

4. Finally, check the following items.
   - Make sure the operation lever has been reset.
   - Check the items given in step 2 again. (Pull lightly on the wire to see if it is held firmly in place.)

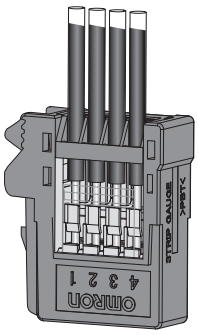

Disconnection Procedure

1. Press in the operation level, confirm that the operation lever is locked into place, and then pull out the wire.
2. After you remove the wire, always reset the operation lever. However, if you are going to connect another wire to the same terminal, you do not need to reset the operation lever and can immediately connect the other wire.

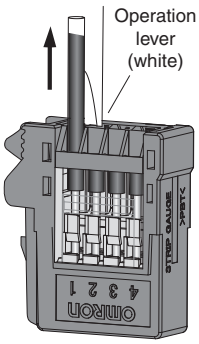

XW2R

Many Variations in Connectors and Number of Poles

- Models available with Phillips screw, slotted screw, push-in, or e-CON connections.
- The terminal arrangement enables smoother wiring work.
- Push-in terminals simplify wiring and make the Terminal Blocks even easier to use. (In comparison to the OMRON XW2F.)
- Mounting to DIN Track is possible.

Models that are mounted with screws are also available.
Refer to page 67.

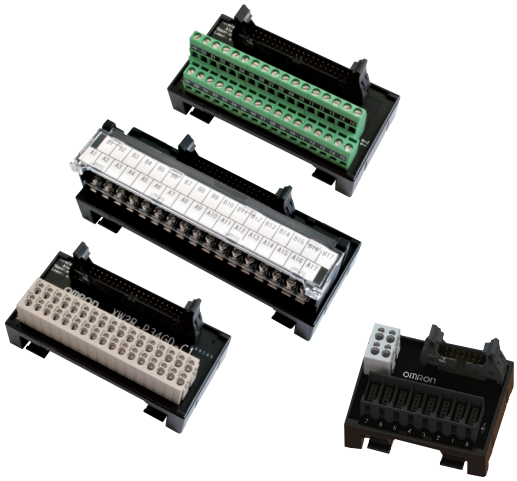

Model List

With power supply terminals

XW2R - □□□GD - COM

Wiring method		I/O Points	Mounted Connector type		Mounting method		Power supply terminals	
N	e-CON	08	G	MIL (XG4A)	D	DIN Track mounting	COM	Provided

Without power supply terminals

XW2R - □□□□□D - T

Wiring method		Number of poles	Mounted Connector type		Plug/Socket		Mounting method	
J	Phillips screw	20	G	MIL (XG4A)	Blank	Plug (male)	D	DIN Track mounting
E	Slotted screw (rise up)	34	F	FCN	R	Socket (female) *		
P	Push-in spring	40	D	D-sub *				
		50	R	MR *				
		60	M	MDR *				

* Consult your OMRON representative for these models.

Options (Order Separately)

Connecting Cables for Connector-Terminal Block Conversion Units
Refer to page 49.

With power supply terminals

e-CON Type

Ordering Information

Appearance	I/O Points	I/O	Model	Mounted Connector model	Cable Connector model
	8 Points	Input	**XW2R-N08GD-COM**	XG4A-1431 (MIL Connector) XN2D-4471 (e-CON Connector)	XG4M-1430-T (MIL Connector) XN2A-1470 (e-CON Connector)

Ratings and Specifications

Rated current		Power supply terminal block: 2 A, Connectors/e-CON Connectors: 1 A (However, rated current of e-CON Connector depends on the wires that are used.)
Rated voltage		24VDC
Insuration resistance		100MΩ min. (at 500VDC)
Dielectric strength		500VAC for 1 min (leakage current: 1 mA max.)
Ambient operating temperature		0 to 55°C
Applicable wires	**Applicable wire sizes***	AWG 24 to 14 (ferrules), AWG 28 to 14 (stranded wires), AWG 28 to 16 (solid wires) (Outer diameter of insulation must be 4 mm max)
	Stripped length	AWG28-16: 8 to 10 mm AWG14: 9 to 10 mm

* This is the applicable range for the power supply terminal block. For the applicable wire sizes for I/O Connectors (e-CON), refer to page 40.

Wiring Diagram

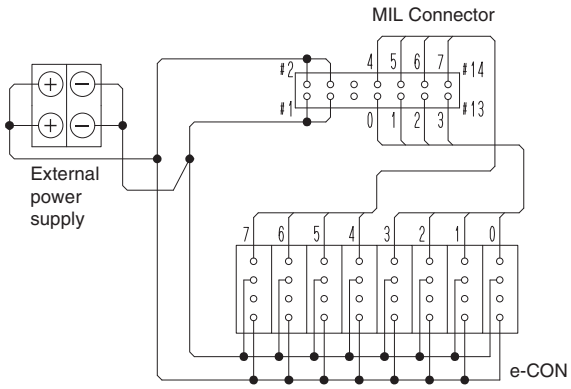

Dimensions

(Unit: mm)

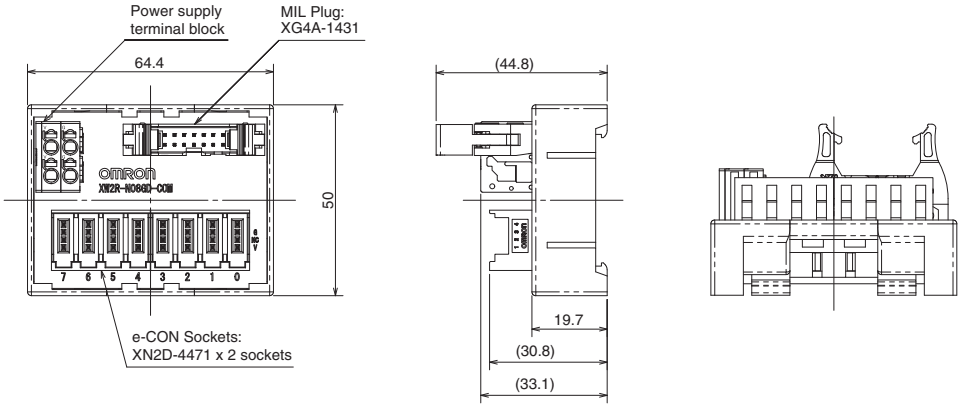

Input Device Connectors: XN2 e-CON Connectors

For Sensor

Appearance	Number of poles	Model
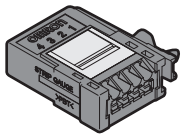	4	**XN2A-1470**

Relay Connector

Appearance	Number of poles	Model
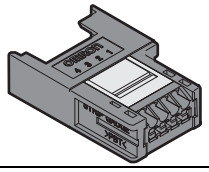	4	**XN2B-1470**

Ratings and Specifications

Rated current	3 A/pin (with AWG20 wires), 2 A/pin (with AWG22 wires), 1 A/pin (with AWG24 wires), 0.5 A/pin (with AWG26 or AWG28 wires)
Rated voltage	32 VDC
Contact resistance	30 mΩ max. (at 20 mV, 100 mA max.)
Insuration resistance	10^3 MΩ min. (at 500VDC)
Dielectric strength	1,000 VAC for 60 sec (leakage current: 1 mA max.)
Insertion durability	50 times
Ambient operating temperature	-30 to 75°C ∗
Applicable wires	Stranded wire 0.08mm^2 (AWG28) to 0.5mm^2 (AWG20) (Outer diameter of insulation must be 1.5 mm max)

∗ The operating temperature range is restricted by the maximum operating temperature of the cable.

Wiring Procedure

Wire Preparation

Use the strip gauge on the front panel and strip 7 to 8 mm of the insulation. If you use stranded wires, twist them several times.

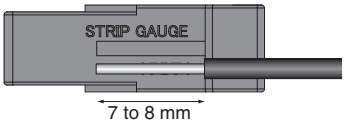

Connection Procedure

1. Press a flat-blade screwdriver into the operation hole until the operation lever locks into place.

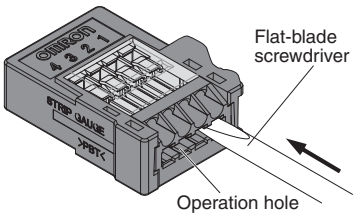

2. Insert the wire all the way into the wire insertion hole. Confirm that the insulation on the wire also enters the wire insertion hole and that the end of the wire has passed through the connection section.

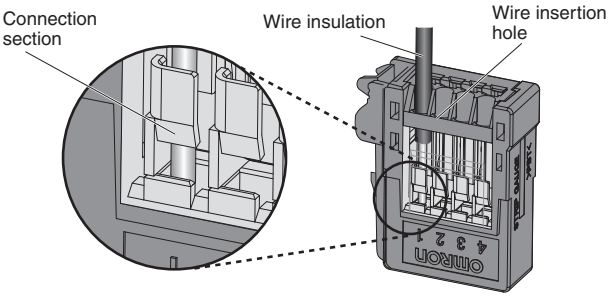

3. Insert a flat-blade screwdriver into the release hole and gently reset the lever. You should hear the operation lever reset.

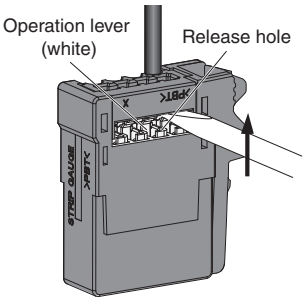

4. Finally, check the following items.
   - Make sure the operation lever has been reset.
   - Check the items given in step 2 again. (Pull lightly on the wire to see if it is held firmly in place.)

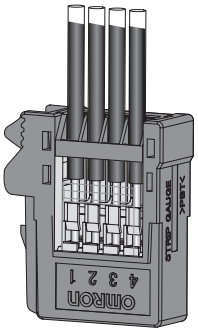

Disconnection Procedure

1. Press in the operation level, confirm that the operation lever is locked into place, and then pull out the wire.
2. After you remove the wire, always reset the operation lever. However, if you are going to connect another wire to the same terminal, you do not need to reset the operation lever and can immediately connect the other wire.

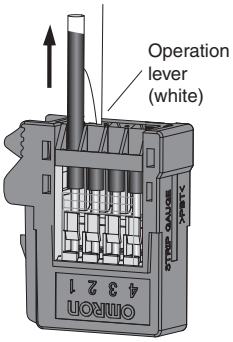

Without power supply terminals

Phillips screw

Ordering Information

Appearance*	Mounted Connector model		Number of poles	Model	Dimension A (mm)
	MIL Connector	XG4A-2031	20	**XW2R-J20GD-T**	81.7
		XG4A-3431	34	**XW2R-J34GD-T**	130.7
		XG4A-4031	40	**XW2R-J40GD-T**	151.7
		XG4A-5031	50	**XW2R-J50GD-T**	186.7
		XG4A-6031	60	**XW2R-J60GD-T**	221.7
	FCN Connector	FCN-364P040-AU	40	**XW2R-J40FD-T**	151.7

* The mounted Connector shown in the appearance illustration is a MIL Connector.

Ratings and Specifications

Rated current		1 A
Rated voltage		125 VAC, 24 VDC
Insuration resistance		100MΩ min.(at 500VDC)
Dielectric strength		500VAC for 1 min (leakage current: 1 mA max.)
Ambient operating temperature		0 to 55°C
Applicable wires	**Applicable wire sizes**	AWG 22 to 16 (round or forked crimp terminals) AWG 26 to 16 (stranded or solid wires)
	Stripped length	9 mm
	Tightening	0.5 N·m

Details on Crimp Terminals

Wiring Terminal Blocks

- Using Crimp Terminals (With a Terminal Block with M3 Screws)

Terminal Screw Tightening Torque

- Use a tightening torque of 0.5 N·m when connecting wires or crimp terminals to the terminal block.

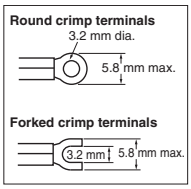

Applicable crimp terminals		Applicable wires
Round crimp terminals	1.25-3	AWG 22 to 16 (0.30 to 1.25 mm^2)
Forked crimp terminals	1.25Y-3	AWG 22 to 16 (0.30 to 1.25 mm^2)

Dimensions

(Unit: mm)

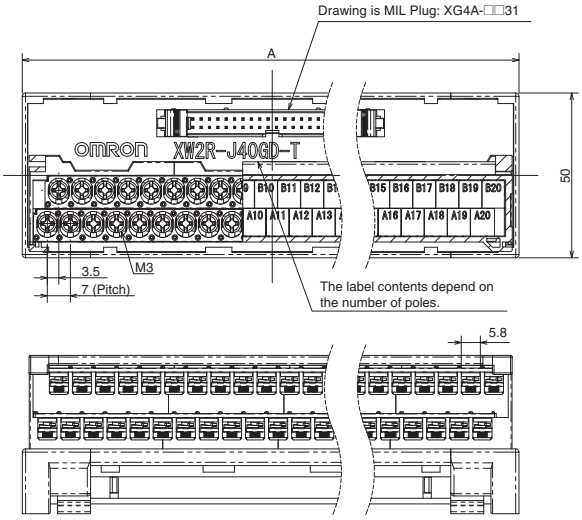

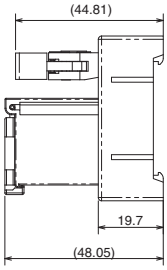

Wiring Diagram

Mounted Connector model: MIL Connector

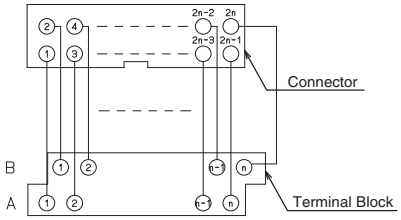

Mounted Connector model: FCN Connector

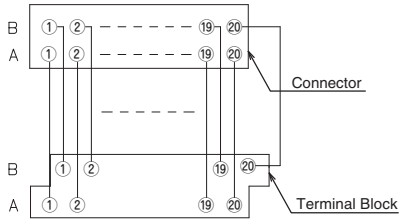

Label Contents

	B1	B2	B3	B4	B5	B6	B7	B8	B9	B10	B11	B12	B13	B14	B15	B16	B17
A1	A2	A3	A4	A5	A6	A7	A8	A9	A10	A11	A12	A13	A14	A15	A16	A17	

Note: The label contents for a Terminal Block with 34 poles are shown.

XW2R

Without power supply terminals

Slotted screw (rise up)

Ordering Information

Appearance*	Mounted Connector model		Number of poles	Model	Dimension A (mm)
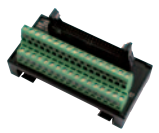	MIL Connector	XG4A-2031	20	**XW2R-E20GD-T**	64.4
		XG4A-3431	34	**XW2R-E34GD-T**	98.5
		XG4A-4031	40	**XW2R-E40GD-T**	113.5
		XG4A-5031	50	**XW2R-E50GD-T**	138.5
		XG4A-6031	60	**XW2R-E60GD-T**	163.5
	FCN Connector	FCN-364P040-AU	40	**XW2R-E40FD-T**	113.5

* The mounted Connector shown in the appearance illustration is a MIL Connector.

Ratings and Specifications

Rated current		1 A
Rated voltage		125 VAC, 24 VDC
Insuration resistance		100MΩ min. (at 500VDC)
Dielectric strength		500VAC for 1 min (leakage current: 1 mA max.)
Ambient operating temperature		0 to 55°C
Appli cable wires	**Applicable wire sizes**	AWG 22 to 16 (ferrules) AWG 26 to 16 (stranded or solid wires)
	Stripped length	7 mm
	Tightening	0.5 to 0.6 N·m

Details on Crimp Terminals

Applicable crimp terminals		Applicable wires
Rod	TC-05 Dia. = 1	AWG22 to AWG18 (0.30 to 0.75 mm^2)
	TC-1.25S Dia. = 1.5	AWG22 to AWG16 (0.30 to 1.25 mm^2)
Blade	BT1.25-9-1 BT1.25-10-1 W = 2.2	AWG22 to AWG16 (0.30 to 1.25 mm^2)

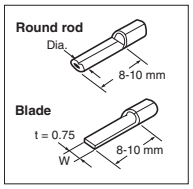

Note: Round rod and blade crimp terminals are made by Nichifu.

Dimensions

(Unit: mm)

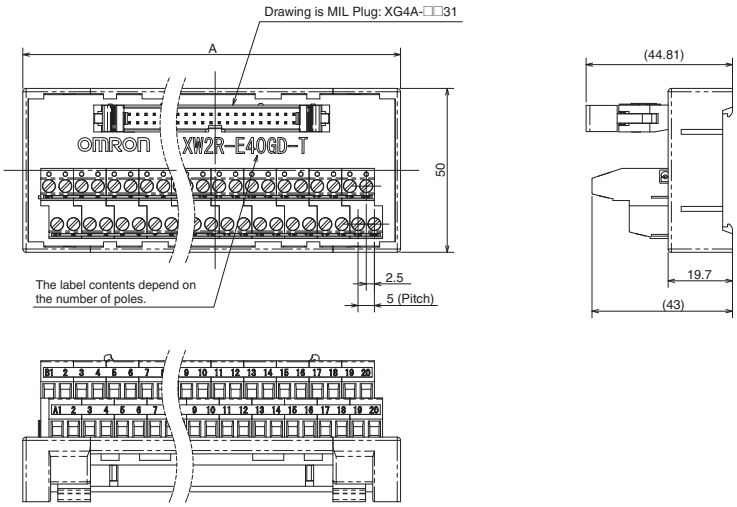

Wiring Diagram

Mounted Connector model : MIL Connector

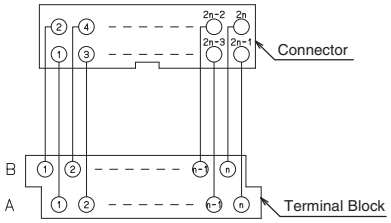

Mounted Connector model : FCN Connector

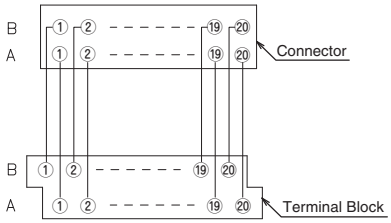

Label Contents

B1	2	3	4	5	6	7	8	9	10	11	12	13	14	15	16	17		
	A1	2	3	4	5	6	7	8	9	10	11	12	13	14	15	16	17	

Note: The label contents for a Terminal Block with 34 poles are shown.

Without power supply terminals

Push-in spring

Ordering Information

Appearance*	Mounted Connector model		Number of poles	Model	Dimension A (mm)
	MIL Connector	XG4A-2031	20	**XW2R-P20GD-T**	64.4
		XG4A-3431	34	**XW2R-P34GD-T**	98.5
		XG4A-4031	40	**XW2R-P40GD-T**	113.5
		XG4A-5031	50	**XW2R-P50GD-T**	138.5
		XG4A-6031	60	**XW2R-P60GD-T**	163.5
	FCN Connector	FCN-364P040-AU	40	**XW2R-P40FD-T**	113.5

*The mounted Connector shown in the appearance illustration is a MIL Connector.

Ratings and Specifications

Rated current		1 A
Rated voltage		125 VAC, 24 VDC
Insuration resistance		100MΩ min. (at 500VDC)
Dielectric strength		500VAC for 1 min (leakage current: 1 mA max.)
Ambient operating temperature		0 to 55°C
Applicable wires	**Applicable wire sizes**	AWG 24 to 14 (ferrules) AWG 28 to 14 (stranded or solid) (Outer diameter of insulation must be 4 mm max)
	Stripped length	AWG28-16: 8 to 10 mm AWG14: 9 to 10 mm

Details on Crimp Terminals

Applicable Ferrules

- Use ferrules of the lengths and thicknesses specified below.If other lengths or thicknesses are used, connection maynot be possible or it may not be possible to insert or remove the posts.

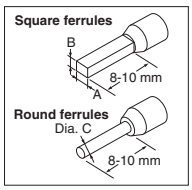

- Ferrule Dimensions

Square ferrules	**Dimension A (Width)**	2.7 mm max.	The cross-sectional area after crimping must be 4.8 mm^2 or less
	Dimension B (Height)	2 mm max.	
Round ferrules	**Dimension C (Diameter)**	2 mm dia. max. (after crimping)	

Refer to page 46 for information on Square/Round ferrule and use tool.

Dimensions

(Unit: mm)

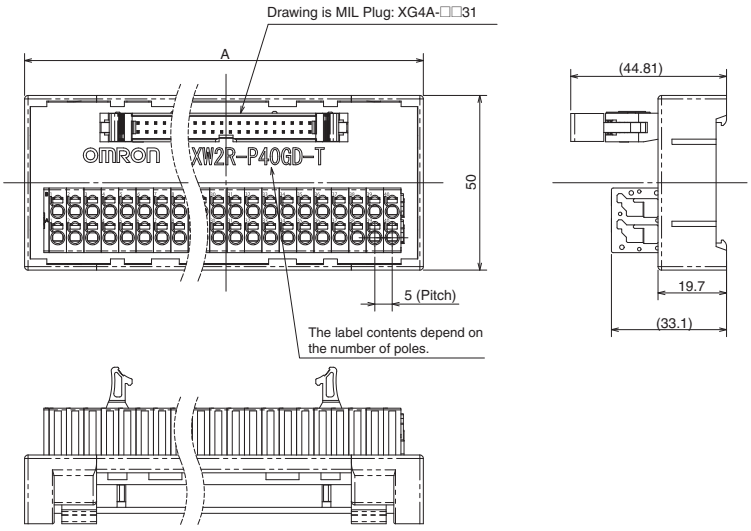

Wiring Diagram

Mounted Connector model: MIL Connector

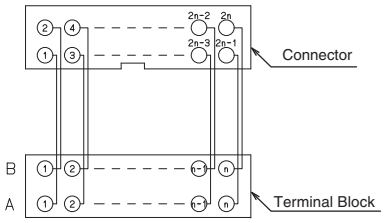

Mounted Connector model: FCN Connector

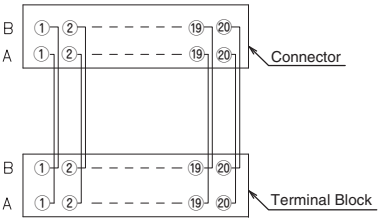

Label Contents

B	1	2	3	4	5	6	7	8	9	10	11	12	13	14	15	16	17
A	1	2	3	4	5	6	7	8	9	10	11	12	13	14	15	16	17

Note: The label contents for a Terminal Block with 34 poles are shown.

XW2R-COM

Space-saving and less wiring work of power supply wiring are achieved.

- Common wiring is already wired on the PCB, transition wiring is unnecessary.
- Wiring is completed by one action.
- Models available with +,–,+ – Mix.

Application Example

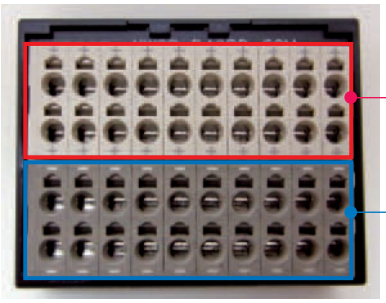

Each terminal connected by PCB.
→Bus-bar and transition wiring are unnecessary.

Connection Examples

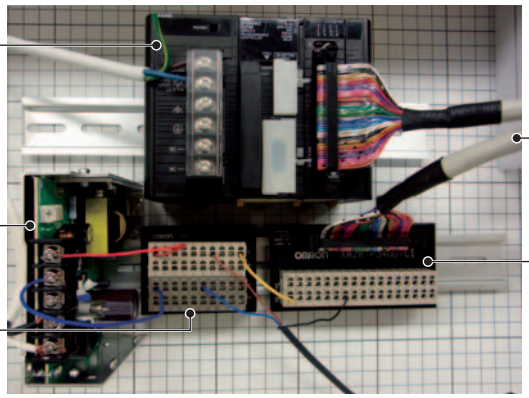

Model list

XW2R - P 40 □ D - COM

Wiring method	
P	Push-in spring

Terminal number of poles	
40	40 poles

Type of connector	
P	+ Common
M	– Common
B	+ – Mix

Mounting method	
D	DIN Track mounting

Power supply terminals (Common terminals)	
COM	Provided

Ordering Information

Appearance	Specification	Number of poles	Model
	+ Common terminal	40	**XW2R-P40PD-COM**
	– Common terminal		**XW2R-P40MD-COM**
	+ – Mix terminal		**XW2R-P40BD-COM**

Ratings and Specifications

Rated current		10A(Unit total)
Rated voltage		125VDC/240VAC
Insuration resistance		100MΩmin. (at 500VDC)
Ambient operating temperature		0 to 55°C
Applicable wires	Applicable wire sizes	Ferrule:AWG24 to 14 ($0.2mm^2$ to $2mm^2$) Stranded or solid wire:AWG 28 to 14 ($0.08mm^2$ to $2mm^2$) (Outer diameter of insulation must be 4 mm max)
	Stripped length	AWG28-16: 8 to 10 mm AWG14: 9 to 10 mm

Details on Crimp Terminals

Applicable Ferrules

- Use ferrules of the lengths and thicknesses specified below.If other lengths or thicknesses are used, connection maynot be possible or it may not be possible to insert or remove the posts.

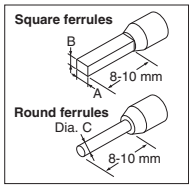

- Ferrule Dimensions

Square ferrules	**Dimension A (Width)**	2.7 mm max.	The cross-sectional area after crimping must be 4.8 mm^2 or less
	Dimension B (Height)	2 mm max.	
Round ferrules	**Dimension C (Diameter)**	2 mm dia. max. (after crimping)	

Refer to page 46 for information on Square/Round ferrule and use tool.

Dimensions

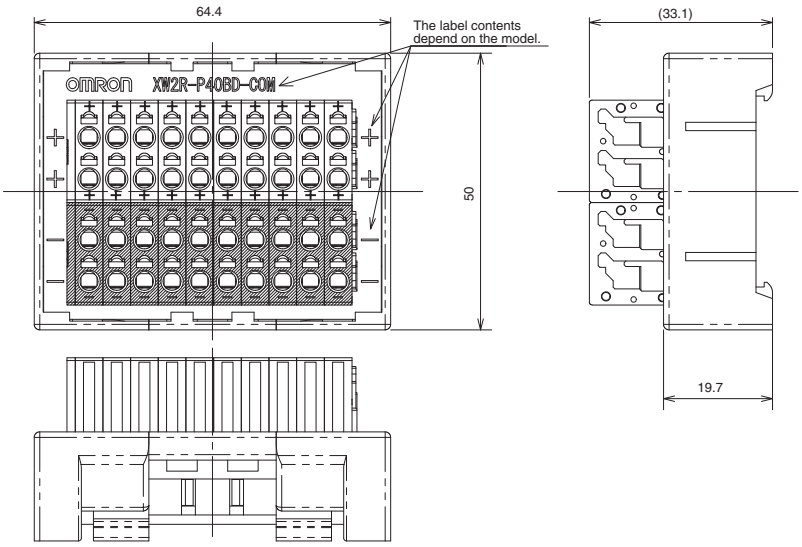

Wiring Diagram

形XW2R-P40PD-COM

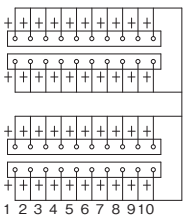

形XW2R-P40MD-COM

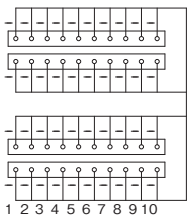

形XW2R-P40BD-COM

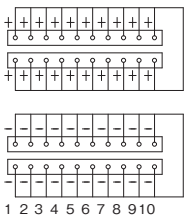

Label Contents

		1	2	3	4	5	6	7	8	9	10
XW2R-P40PD-COM	Upper	+	+	+	+	+	+	+	+	+	+
	Lower	+	+	+	+	+	+	+	+	+	+
XW2R-P40MD-COM	Upper	–	–	–	–	–	–	–	–	–	–
	Lower	–	–	–	–	–	–	–	–	–	–
XW2R-P40BD-COM	Upper	+	+	+	+	+	+	+	+	+	+
	Lower	–	–	–	–	–	–	–	–	–	–

Safety Precautions

Precautions for Correct Use

Wiring Precautions

- Do not perform wiring work, remove connectors, or connect connectors while power is being supplied. Electric shock or damage to the device may result.
- Double-check all wiring before turning ON the power supply.
- After wiring, route the cable so that force is not applied directly to the connections.

Wires for Terminal Blocks

- Do not damage the cores when stripping the insulation from them.
- Always twist stranded wires together before connecting them.
- Do not presolder wires. It may not be possible to connect them or remove them.

XW2R-P□□ type (Square/Round ferrule)

Type of terminal	Manufacturer	Size	Recommend ferrule	Recommend crimp tool
Square ferrule	Phoenix Contact	AWG24	AI0.25-8□□	CRIMFOX6
		AWG22	AI0.34-8TQ	
		AWG20	AI0.5-10WH AI0.5-8WH	
		AWG18	AI0.75-10GY AI0.75-8GY	
		AWG16	AI1.5-10BK	
		AWG14	AI2.5-8BU	
	Weidmuller	AWG24	H0.25/12	PZ6 roto
		AWG22	H0.34/12	
		AWG20	H0.5/14	
		AWG18	H0.75/14	
		AWG16	H1.5/14	
		AWG14	H2.5/15D	
Round ferrule	Nichifu	AWG22-AWG16	TGV TC-1.25-9T	NH11 NH32 NH65

Note: □□ of ferrule model is for color (Ex: YE = Yellow)

When an electric wire is connected directly (J,E,P type)

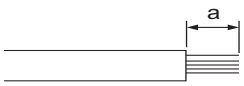

Model	Strip length “a”
XW2R-J□□	9 mm
XW2R-E□□	7 mm
XW2R-P□□	AWG28-16: 8 to 10 mm
	AWG14: 9 to 10 mm

Mounting Units to and Removing Units from DIN Track

Mounting Procedure

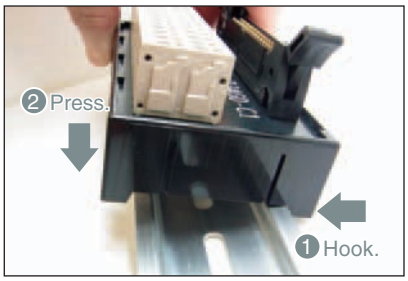

1. Hook the Unit on the DIN Track.
2. Press the Unit onto the DIN Track to secure it.

Removal Procedure

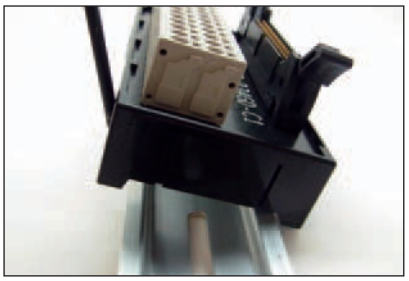

1. Insert a flat-blade screwdriver into the DIN Track lock.
2. Move the screwdriver like a lever to free the lock.

Connecting Spring cramp Terminals

Using Ferrules

How to insert wire

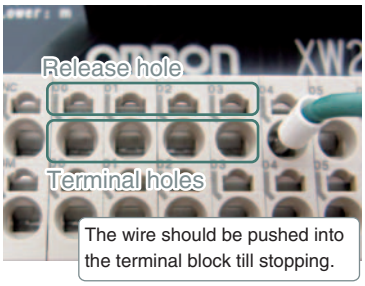

How to release wire

Using Stripped Wires

Inserting and Removing Wires

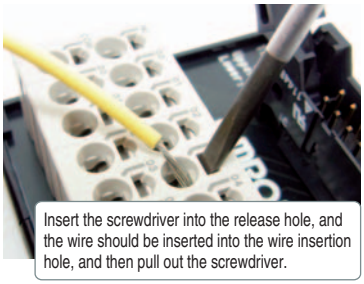

Inserting Wires

1. Press the a flat-blade screwdriver diagonally into the release hole. Press at an angle of 10° to 15°.
   If you press in the screwdriver correctly, you will feel the spring in the release hole.

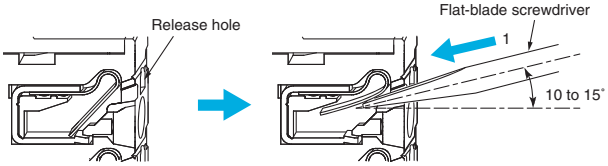

2. Leave the flat-blade screwdriver pressed into the release hole and insert the stranded wire or the solid wire into the terminal hole. Insert the stranded wire or the solid wire until the stripped portion is no longer visible to prevent shorting.

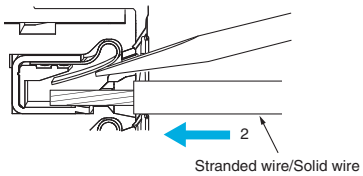

3. Remove the flat-blade screwdriver from the release hole.

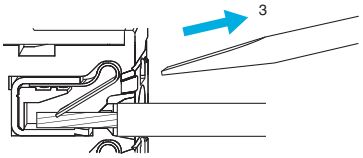

Removing Wires

1. Press the flat-blade screwdriver diagonally into the release hole. Press at an angle of 10° to 15°.
   If you press in the screwdriver correctly, you will feel the spring in the release hole.

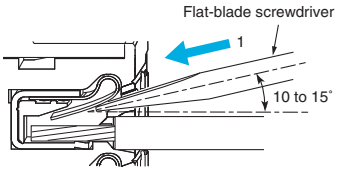

2. Leave the flat-blade screwdriver pressed into the release hole and pull out the wire.

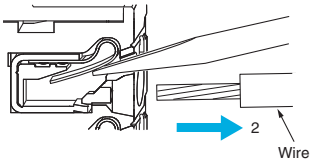

3. Remove the flat-blade screwdriver from the release hole.

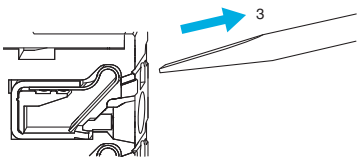

Precautions for Safe Use

- Do not press the flat-blade screwdriver straight into the release hole. Doing so may break the terminal block.

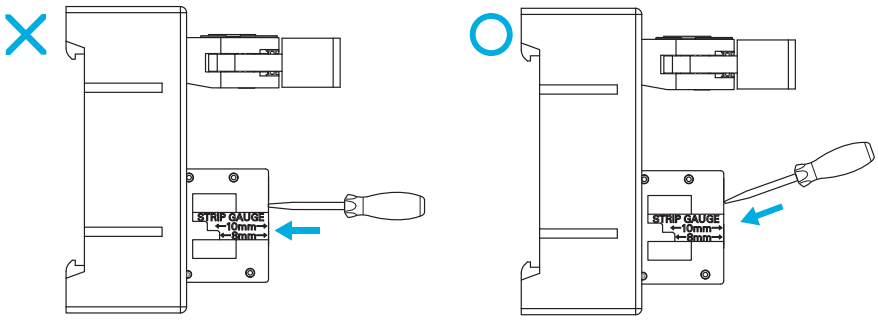

- When you insert a flat-blade screwdriver into a release hole, press it down with a force of 30 N max. Applying excessive force may damage the terminal block.
- Do not tilt or twist the flat-blade screwdriver while it is pressed into the release hole. Doing so may break the terminal block.

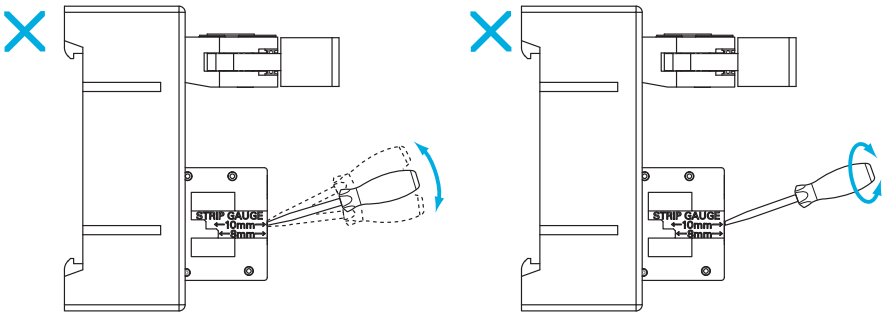

- Make sure that all wiring is correct.
- Do not bend the cable forcibly. Doing so may sever the cable.

Use tool

- Select a use tool from following table.

Model	Use tool	Specialized tool and dimension
XW2R-J□□	Phillips screwdriver	JIS#2
XW2R-E□□	Flat-blade screwdriver	Model XW4Z-00B Head of screwdriver Is 0.4 x 2.5mm max.
XW2R-P□□		

Flat-blade screwdriver

Model
XW4Z-00B

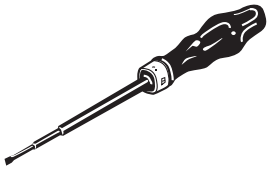

Bending Radius of Connecting Cables

- To prevent damaging the Connecting Cables, use the following minimum bending radii as guidelines.

XW2Z - □ □ □ □ □

End of model number	Minimum bending radius
BF-L, EE-L, FF-L	66 mm
A	67.2 mm
EE	83 mm
B, D, K, L, N	88 mm

For checking electrical continuity

- XW2R-E□□ type: There is no elecrical continuity in the screw, Please confirm it at hole for confirming continuity or wiring part.

XW2Z

Connect Connector-Terminal Block Conversion Units (XW2□) to I/O Units for Programmable Controllers with one touch.

Shielded

Ratings and Specifications

Rated current	1 A
Rated voltage	125 VAC 24 VDC
Contact resistance	20 mΩ max. (at 20 mV, 100 mA max.) ✻1
Insulation resistance	100 MΩ min. (at 500 VDC)
Dielectric strength	500 VAC for 1 min (leakage current: 1 mA max.) ✻2
Ambient operating temperature	–25 to 80°C

✻1 Contact resistance for the Connector.
✻2 Dielectric strength for the Connector.

Materials and Finish

Item	Part name			Materials and Finish
Connectors	XG4M-2030 XG4M-3430 XG4M-4030	Housing		Fiber-glass reinforced PBT resin (UL94V-0)/black
		Cover		
		Contacts	Mating end	Phosphor bronze/nickel base, 0.15-µm gold plating
			Press-fit end	Phosphor bronze/nickel base, 2.0-µm tin plating
	XG4T-2004/4004	Strain Relief		Fiber-glass reinforced PBT resin (UL94V-0)/black
	FCN-367J024-AU/F * FCN-367J040-AU/F *	Housing		Polyester resin (UL94V-0)/black
		Contacts	Mating end	Copper alloy/gold plated
			Press-fit end	Copper alloy/tin plated
		Connecting screw		Steel/nickel plated
Cable	UL2464 Interface Cable			AWG28/Shielded
Crimp terminal	Forked crimp terminal			1.25 Y AS 3.5 or the equivalent

Note: These housings, contacts, and connecting screws are made by Fujitsu Component Ltd.

XW2Z-□□□A

Connectors: One 24-pin FCN Connector to One 20-pin MIL Connector

Appearance	Model	Cable length L (m)
	**XW2Z-050A**	0.5
	XW2Z-100A	1
	XW2Z-150A	1.5
	XW2Z-200A	2
	XW2Z-300A	3
	XW2Z-500A	5
	XW2Z-700A	7
	XW2Z-010A	10
	XW2Z-15MA	15
	XW2Z-20MA	20

Cable length L (m)

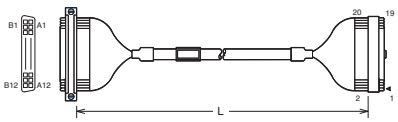

Wiring Diagram

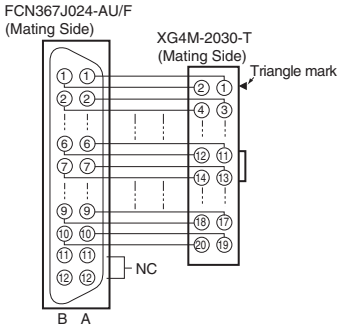

XW2Z-□□□AA

Connectors: One 14-pin MIL Connector to One 14-pin MIL Connector

Appearance	Model	Cable length L (m)
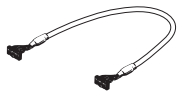	XW2Z-050AA	0.5
	XW2Z-100AA	1
	XW2Z-200AA	2
	XW2Z-500AA	5
	XW2Z-010AA	10

Cable length L (m)

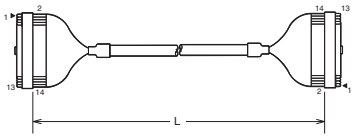

Wiring Diagram

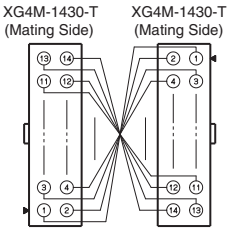

Note: Wire the pins 1:1 so that the Connector pin numbers match.

XW2Z-□□□AU(for XW2D-20C6)

Connectors: One 24-pin FCN Connector to One 20-pin MIL Connector with Lock

Appearance	Model	Cable length L (m)
	XW2Z-050AU	0.5
	XW2Z-100AU	1
	XW2Z-150AU	1.5
	XW2Z-200AU	2
	XW2Z-300AU	3
	XW2Z-500AU	5

Cable length L (m)

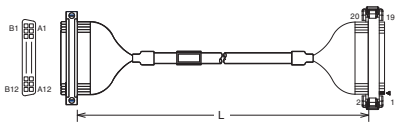

Wiring Diagram

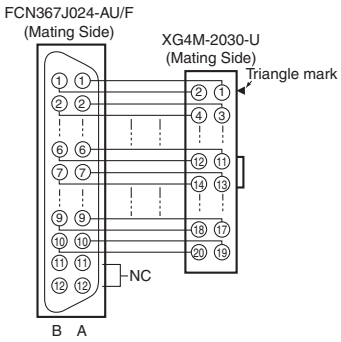

XW2Z-□□□B

Connectors: One 40-pin FCN Connector to One 40-pin MIL Connector

Appearance	Type	Model	Cable length L (m)
	Normal wiring	XW2Z-050B	0.5
		XW2Z-100B	1
		XW2Z-150B	1.5
		XW2Z-200B	2
		XW2Z-300B	3
		XW2Z-500B	5
		XW2Z-700B	7
		XW2Z-010B	10
		XW2Z-15MB	15
		XW2Z-20MB	20
	Reversed wiring	XW2Z-050B-R1	0.5
		XW2Z-100B-R1	1
		XW2Z-150B-R1	1.5
		XW2Z-200B-R1	2
		XW2Z-300B-R1	3
		XW2Z-500B-R1	5

Cable length L (m)

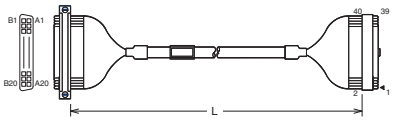

Wiring Diagram

Normal wiring

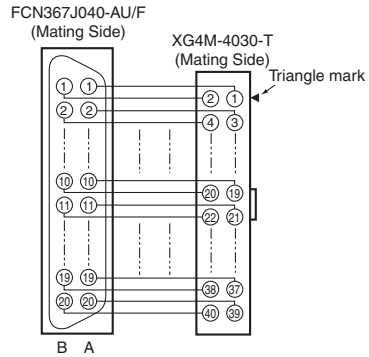

Reversed wiring

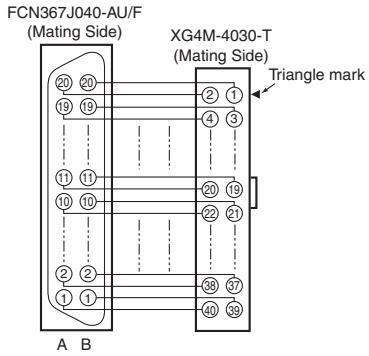

XW2Z-□□□BU (for XW2D-40C6)

Connectors: One 40-pin FCN Connector to One 40-pin MIL Connector with Lock

Appearance	Type	Model	Cable length L (m)
	Normal wiring	XW2Z-050BU	0.5
		XW2Z-100BU	1
		XW2Z-150BU	1.5
		XW2Z-200BU	2
		XW2Z-300BU	3
		XW2Z-500BU	5

Cable length L (m)

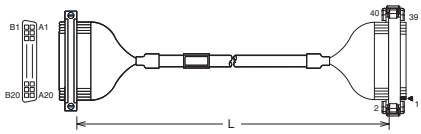

Wiring Diagram

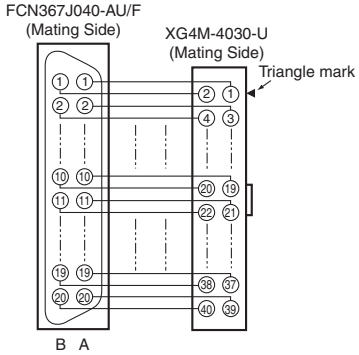

XW2Z-□□□B-A(for XW2F-40G7-IN32)

Connectors: One 40-pin FCN Connector to One 40-pin MIL Connector

Appearance	Type	Model	Cable length L (m)
	Normal wiring	XW2Z-100B-A	1
		XW2Z-150B-A	1.5
		XW2Z-200B-A	2
		XW2Z-300B-A	3
		XW2Z-500B-A	5

Cable length L (m)

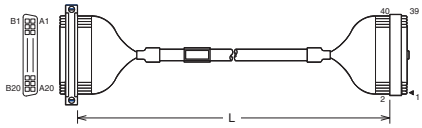

Wiring Diagram

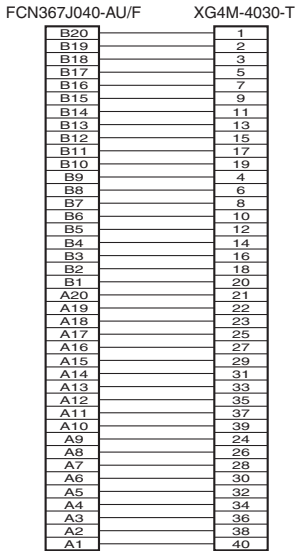

XW2Z-□□□B-B(for XW2F-40G7-OUT32)

Connectors: One 40-pin FCN Connector to One 40-pin MIL Connector

Appearance	Type	Model	Cable length L (m)
	Normal wiring	XW2Z-100B-B	1
		XW2Z-150B-B	1.5
		XW2Z-200B-B	2
		XW2Z-300B-B	3
		XW2Z-500B-B	5

Cable length L (m)

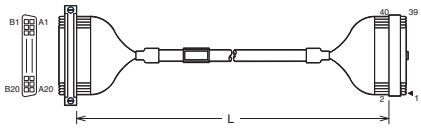

Wiring Diagram

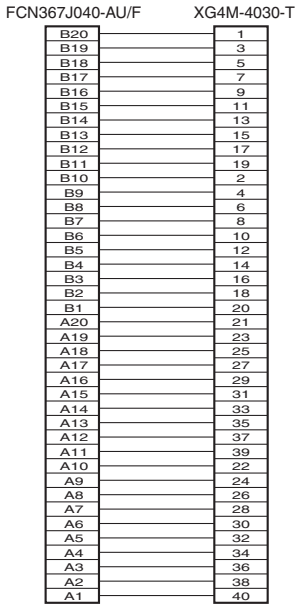

XW2Z-□□□D

Connectors: One 40-pin FCN Connector to Two 20-pin MIL Connectors

Appearance	Model	Cable length L (m)	
		A	B
	XW2Z-100D	1	0.75
	XW2Z-150D	1.5	1.25
	XW2Z-200D	2	1.75
	XW2Z-300D	3	2.75
	XW2Z-500D	5	4.75
	XW2Z-010D	10	9.75
	XW2Z-15MD	15	14.75
	XW2Z-20MD	20	19.75

Cable length L (m)

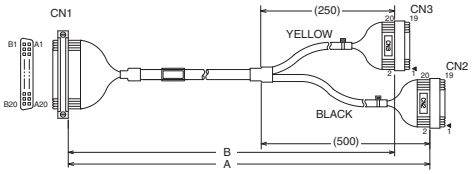

Wiring Diagram

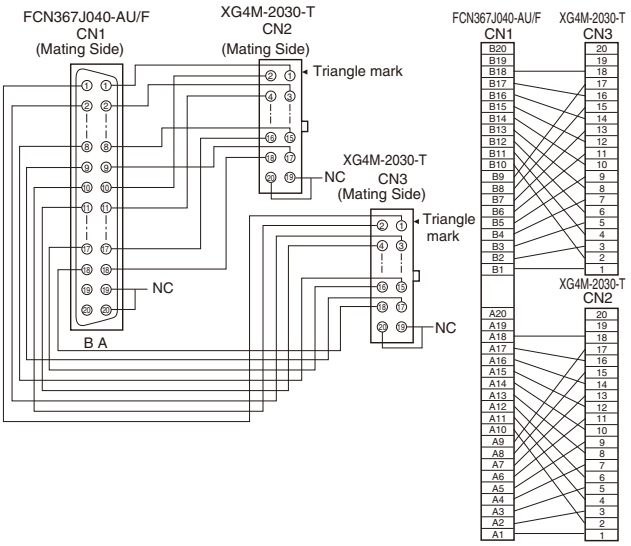

XW2Z-□□□EE

Connectors: One 34-pin MIL Connector to One 34-pin MIL Connector

Appearance	Model	Cable length L (m)
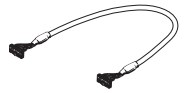	XW2Z-050EE	0.5
	XW2Z-100EE	1
	XW2Z-150EE	1.5
	XW2Z-200EE	2
	XW2Z-300EE	3
	XW2Z-500EE	5

Cable length L (m)

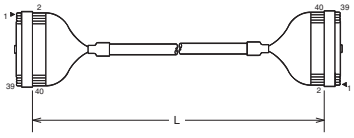

Wiring Diagram

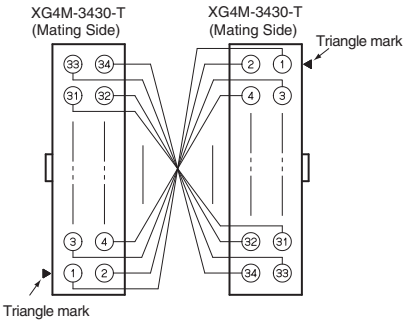

Note: Wire the pins 1:1 so that the Connector pin numbers match.

XW2Z-□□□F

Connectors: One 20-pin MIL Connector to 20 Loose Wires with Crimp Terminals Attached

Appearance	Model	Cable length L (m)
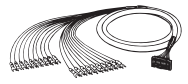	XW2Z-100F	1
	XW2Z-150F	1.5
	XW2Z-200F	2
	XW2Z-300F	3
	XW2Z-500F	5
	XW2Z-010F	10
	XW2Z-15MF	15
	XW2Z-20MF	20

Cable length L (m)

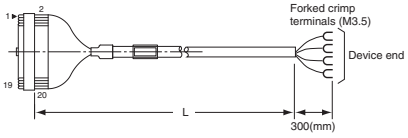

Wiring Diagram

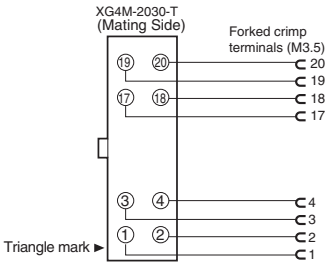

Connector Pin No. Table

Forked terminal	No. of cores	Insulation color	Dot marks	Dot color	Connector pin No.
1	1	Blue	□	Red	1
2				Black	2
3	2	Pink		Red	3
4				Black	4
5	3	Green		Red	5
6				Black	6
7	4	Orange		Red	7
8				Black	8
9	5	Gray		Red	9
10				Black	10
11	6	Blue	□□	Red	11
12				Black	12
13	7	Pink		Red	13
14				Black	14
15	8	Green		Red	15
16				Black	16
17	9	Orange		Red	17
18				Black	18
19	10	Gray		Red	19
20				Black	20

XW2Z-□□□H-1 (to connect CS1-series I/O Unit)

Connectors: One 56-pin FCN Connector to One 60-pin MIL Connector

Appearance	Type	Model	Cable length L (m)
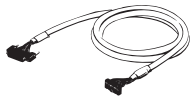	Normal wiring	XW2Z-050H-1	0.5
		XW2Z-100H-1	1
		XW2Z-150H-1	1.5
		XW2Z-200H-1	2
		XW2Z-300H-1	3
		XW2Z-500H-1	5
		XW2Z-700H-1	7
		XW2Z-010H-1	10
	Reversed wiring	XW2Z-100H-1G	1
		XW2Z-150H-1G	1.5
		XW2Z-200H-1G	2
		XW2Z-300H-1G	3
		XW2Z-500H-1G	5

Cable length L (m)

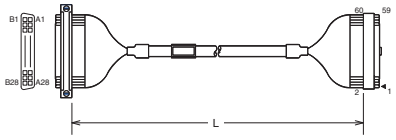

✻ One or two Cables are used for each PLC I/O Unit.
Note: 1. The CS1 signals that are connected to the XW2B/D are different between the XW2Z-□□□H-□and XW2Z-□□□H-□G.

XW2Z-□□□H-2 (to connect CS1-series I/O Unit)

Connectors: One 56-pin FCN Connector to One 20-pin,One 40-pin MIL Connectors

Appearance	Type	Model	Cable length L (m)	
			A	B
	Normal wiring	XW2Z-100H-2	1	0.75
		XW2Z-150H-2	1.5	1.25
		XW2Z-200H-2	2	1.75
		XW2Z-300H-2	3	2.75
		XW2Z-500H-2	5	4.75
		XW2Z-010H-2	10	9.75
	Reversed wiring	XW2Z-100H-2G	1	0.75
		XW2Z-150H-2G	1.5	1.25
		XW2Z-200H-2G	2	1.75
		XW2Z-300H-2G	3	2.75
		XW2Z-500H-2G	5	4.75

Cable length L (m)

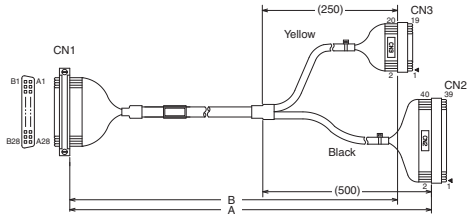

Linear lengths (not including bends)

✻ One or two Cables are used for each PLC I/O Unit.
Note: 1. The CS1 signals that are connected to the XW2B/D are different between the XW2Z-□□□H-□and XW2Z-□□□H-□G.

XW2Z-□□□H-3 (to connect CS1-series I/O Unit)

Connectors: One 56-pin FCN Connector to Three 20-pin MIL Connectors

Appearance	Model	Cable length L (m)		
		A	B	C
	XW2Z-100H-3	1	0.75	1
	XW2Z-150H-3	1.5	1.25	1.5
	XW2Z-200H-3	2	1.75	2
	XW2Z-300H-3	3	2.75	3
	XW2Z-500H-3	5	4.75	5
	XW2Z-010H-3	10	9.75	10

✻ One or two Cables are used for each PLC I/O Unit.

Cable length L (m)

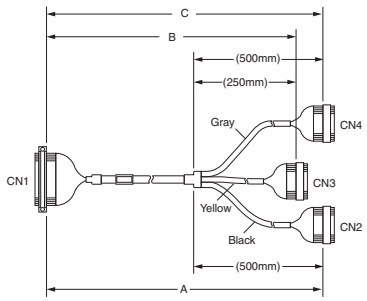

Linear lengths (not including bends)

I/O Signal Tables (Examples for CN1 on CS1W-OD291)

With XW2Z-□□□H-□ Cable Connected

XW2Z-□□□H-3	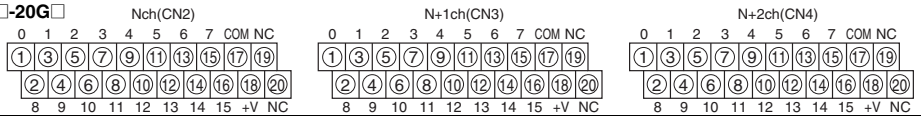
XW2Z-□□□H-2	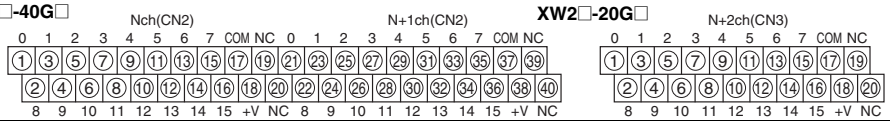
XW2Z-□□□H-1	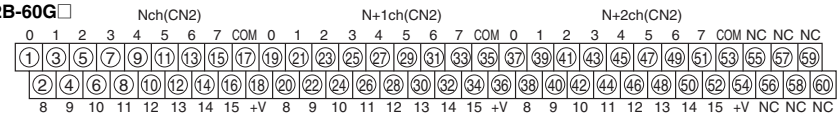

With XW2Z-□□□H-□G/G79-□□□C-□□□-□□□ Cable Connected

G79-□□□C-□□□□□□	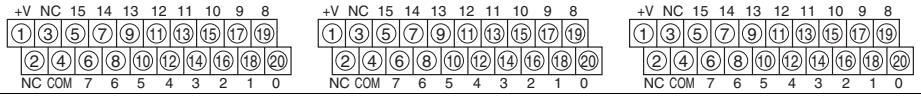
XW2Z-□□□H-2G	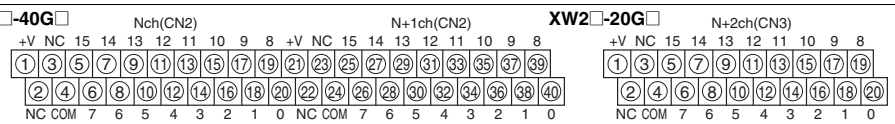
XW2Z-□□□H-1G	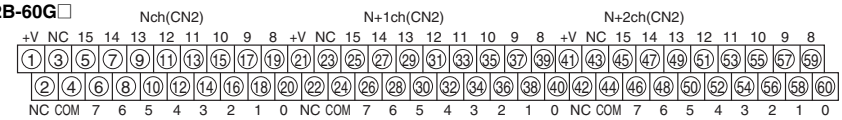

Note: The XW2Z-□□□H-□G have the same I/O signal arrangement as the G79 I/O Relay Terminal Connecting Cables.

XW2Z-□□□K

Connectors: One 40-pin MIL Connector to One 40-pin MIL Connector

Appearance	Model	Cable length L (m)
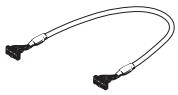	XW2Z-C25K	0.25
	XW2Z-C50K	0.5
	XW2Z-100K	1
	XW2Z-150K	1.5
	XW2Z-200K	2
	XW2Z-300K	3
	XW2Z-500K	5
	XW2Z-010K	10

Cable length L (m)

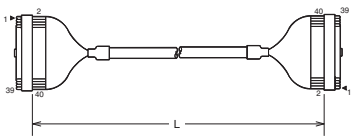

Wiring Diagram

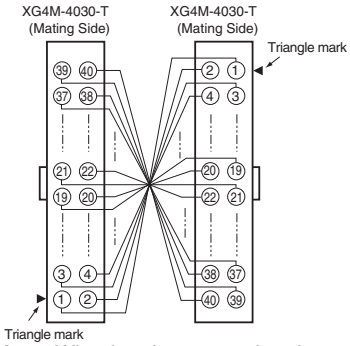

Note: Wire the pins 1:1 so that the Connector pin numbers match.

XW2Z-□□□L

Connectors: One 40-pin FCN Connector to Two 20-pin MIL Connectors

Appearance	Model	Cable length L (m)	
		A	B
	XW2Z-100L	1	0.75
	XW2Z-150L	1.5	1.25
	XW2Z-200L	2	1.75
	XW2Z-300L	3	2.75
	XW2Z-500L	5	4.75
	XW2Z-010L	10	9.75
	XW2Z-15ML	15	14.75
	XW2Z-20ML	20	19.75

Cable length L (m)

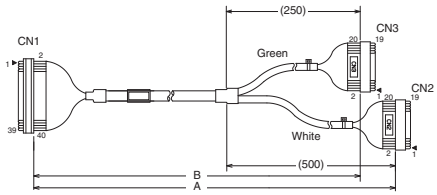

Wiring Diagram

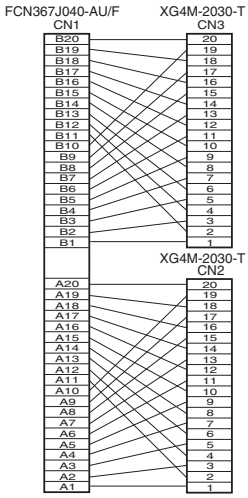

XW2Z-□□□N

Connectors: One 40-pin MIL Connector to Two 20-pin MIL Connector

Appearance	Model	Cable length L (m)	
		A	B
	XW2Z-100N	1	0.75
	XW2Z-150N	1.5	1.25
	XW2Z-200N	2	1.75
	XW2Z-300N	3	2.75
	XW2Z-500N	5	4.75
	XW2Z-010N	10	9.75
	XW2Z-15MN	15	14.75
	XW2Z-20MN	20	19.75

Cable length L (m)

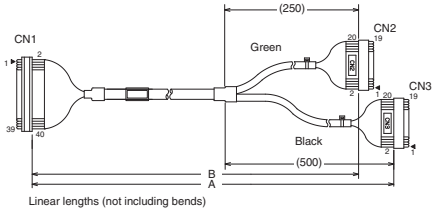

Wiring Diagram

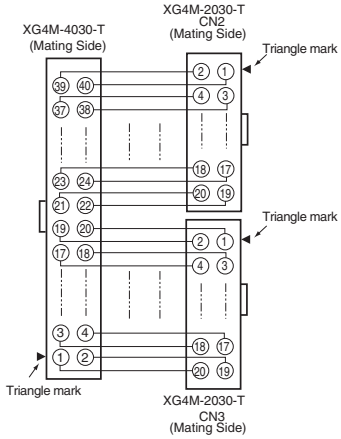

XW2Z-□□□PF (to connect XW2R-□34G□-C□ to OMRON PLC)

Connectors: One 40-pin FCN Connector to One 40-pin MIL Connector

Appearance	Model	Cable length L (m)
	XW2Z-050PF	0.5
	XW2Z-100PF	1
	XW2Z-150PF	1.5
	XW2Z-200PF	2
	XW2Z-300PF	3
	XW2Z-500PF	5

Cable length L (m)

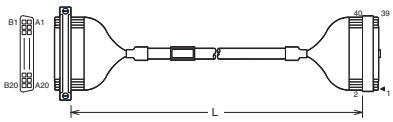

Wiring Diagram

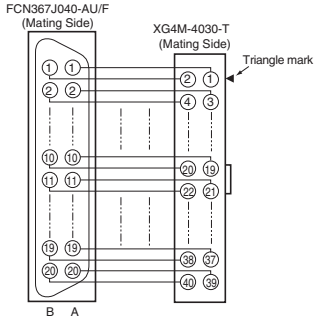

XW2Z-□□□PM (to connect XW2R-□34G□-C□ to OMRON PLC)

Connectors: One 40-pin MIL Connector to One 40-pin MIL Connector

Appearance	Model	Cable length L (m)
	XW2Z-050PM	0.5
	XW2Z-100PM	1
	XW2Z-150PM	1.5
	XW2Z-200PM	2
	XW2Z-300PM	3
	XW2Z-500PM	5

Cable length L (m)

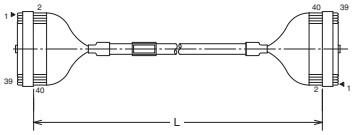

Wiring Diagram

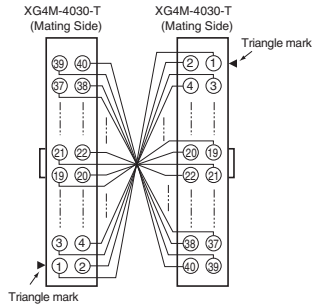

Note: Wire the pins 1:1 so that the Connector pin numbers match.

XW2Z-□□□X

Connectors: One 20-pin MIL Connector to One 20-pin MIL Connector

Appearance	Model	Cable length L (m)
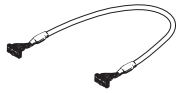	XW2Z-C50X	0.5
	XW2Z-100X	1
	XW2Z-200X	2
	XW2Z-300X	3
	XW2Z-500X	5
	XW2Z-010X	10

Cable length L (m)

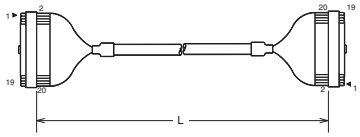

Wiring Diagram

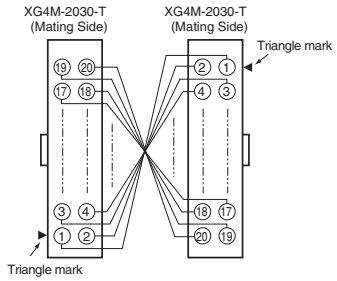

Note: Wire the pins 1:1 so that the Connector pin numbers match.

Safety Precautions

Precautions for Correct Use

● Wiring

- Do not perform wiring work, remove connectors, or connect connectors while power is being supplied. Electric shock or damage to the device may result.
- Double-check all wiring before turning ON the power supply.
- After wiring, route the cable so that force is not applied directly to the connections.

● Bending Radius of Connecting Cables

- To prevent damaging the Connecting Cables, use the following minimum bending radii as guidelines.

XW2Z - □□ □ □ □

End of model number	Minimum bending radius
AA	60mm
A,AU,F,X	68mm
EE	83mm
B,BU,B-A,B-B,D, K,L,N,PF,PM	88mm
H-1,H-2,H-3	99mm

XW2Z

Connect I/O Terminal Blocks (XW2□) to I/O Units of Programmable Controllers. Fast and Faultless.

Ratings and Specifications

Rated current	1 A
Rated voltage	125 VAC 24 VDC
Contact resistance	20 mΩ max. (at 20 mV, 100 mA max.) **✻1**
Insulation resistance	100 MΩ min. (at 500 VDC)
Dielectric strength	500 VAC for 1 min (leakage current: 1 mA max.) **✻2**
Ambient operating temperature	–25 to 80°C

✻1 Contact resistance for the Connector.
✻2 Dielectric strength for the Connector.

Materials and Finish

Item	Part name			Materials and Finish
Connectors	MIL : XG4M-2030 XG4M-4030 XG4M-6030	Housing		Fiber-glass reinforced PBT resin (UL94V-0)/black
		Cover		
		Contacts	Mating end	Phosphor bronze/nickel base, 0.15-μm gold plating
			Press-fit end	Phosphor bronze/nickel base, 2.0-μm tin plating
	XG4T-2004/4004/6004	Strain Relief		Fiber-glass reinforced PBT resin (UL94V-0)/black
	FCN-367J024-AU/FW * FCN-367J040-AU/FW FCN-367J056-AU/FW	Housing		Polyester resin (UL94V-0)/black
		Contacts	Mating end	Copper alloy/gold plated
			Press-fit end	Copper alloy/tin plated
		Connecting screw		Steel/nickel plated
Cable	UL2464 Interface Cable			AWG28 or the equivalent/AWG28 Non-shield

Note: These housings, contacts, and connecting screws are made by Fujitsu Component, Ltd.

XW2Z-□□□□AD-L

Connectors:One 24-pin FCN Connector to One 20-pin MIL Connector

Appearance	Models	Cable length L (m)
	XW2Z-0050AD-L	0.5
	XW2Z-0100AD-L	1
	XW2Z-0200AD-L	2
	XW2Z-0300AD-L	3

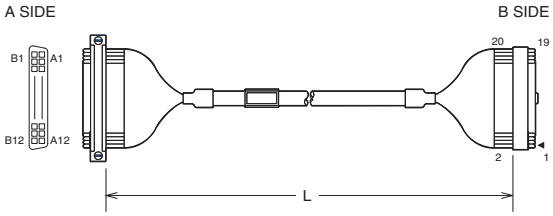

Wiring Diagram

Connector No.		Wire pair No.	Color of insulator	Color of dot	Connector No.	
A SIDE	A1	1	White	–	▶1	B SIDE
	B1		White	Black	2	
	A2	2	Black	–	3	
	B2		Black	White	4	
	A3	3	Yellow	–	5	
	B3		Yellow	Gray	6	
	A4	4	Red	–	7	
	B4		Red	White	8	
	A5	5	Purple	–	9	
	B5		Purple	White	10	
	A6	6	Pink	–	11	
	B6		Pink	White	12	
	A7	7	Orange	–	13	
	B7		Orange	White	14	
	A8	8	Brown	–	15	
	B8		Brown	White	16	
	A9	9	Green	–	17	
	B9		Green	White	18	
	A10	10	Light Green	–	19	
	B10		Light Green	White	20	
	A11	11	NC		–	
	B11		NC		–	
	A12	12	NC		–	
	B12		NC		–	

XW2Z-□□□□BH-L01

Connectors: One 40-pin FCN Connector to Two 20-pin MIL Connectors

Appearance	Models	Cable length L (m)	
		L1	L2
	XW2Z-0100BH-L01	1	0.75
	XW2Z-0150BH-L01	1.5	1.25
	XW2Z-0200BH-L01	2	1.75
	XW2Z-0300BH-L01	3	2.75
	XW2Z-0400BH-L01	4	3.75
	XW2Z-0500BH-L01	5	4.75

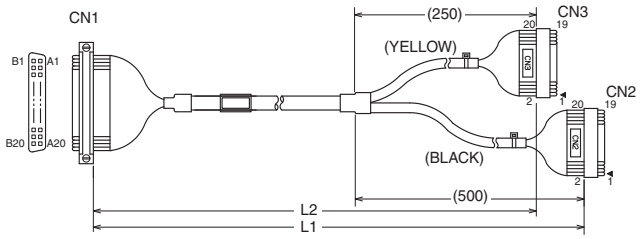

Wiring Diagram

CN 1 : FCN-367J040-AU/FW

Color of insulator	Color of dot	Connector No.
White	Black	B1
Black	White	B2
Yellow	Gray	B3
Red	White	B4
Purple	White	B5
Pink	White	B6
Orange	White	B7
Brown	White	B8
Green	White	B9
Light Green	White	B10
Gray	White	B11
Blue	White	B12
Light Blue	White	B13
White	Red	B14
Black	Orange	B15
Yellow	Red	B16
Red	Yellow	B17
Purple	Yellow	B18
NC		B19
NC		B20

CN 3 : XG4M-2030-T

Connector No.	Color of insulator	Color of dot
▶1	White	Black
2	Light Green	White
3	Black	White
4	Gray	White
5	Yellow	Gray
6	Blue	White
7	Red	White
8	Light Blue	White
9	Purple	White
10	White	Red
11	Pink	White
12	Black	Orange
13	Orange	White
14	Yellow	Red
15	Brown	White
16	Red	Yellow
17	Green	White
18	Purple	Yellow
19	NC	
20	NC	

Color of insulator	Color of dot	Connector No.
White	–	A1
Black	–	A2
Yellow	–	A3
Red	–	A4
Purple	–	A5
Pink	–	A6
Orange	–	A7
Brown	–	A8
Green	–	A9
Light Green	–	A10
Gray	–	A11
Blue	–	A12
Light Blue	–	A13
White	Yellow	A14
Black	Yellow	A15
Yellow	Black	A16
Red	Black	A17
Purple	Black	A18
NC		A19
NC		A20

CN 2 : XG4M-2030-T

Connector No.	Color of insulator	Color of dot
▶1	White	–
2	Light Green	–
3	Black	–
4	Gray	–
5	Yellow	–
6	Blue	–
7	Red	–
8	Light Blue	–
9	Purple	–
10	White	Yellow
11	Pink	–
12	Black	Yellow
13	Orange	–
14	Yellow	Black
15	Brown	–
16	Red	Black
17	Green	–
18	Purple	Black
19	NC	
20	NC	

XW2Z-□□□□BH-L02

Connectors: One 40-pin FCN Connector to Two 20-pin MIL Connectors

Appearance	Models	Cable length L (m)	
		L1	L2
	XW2Z-0100BH-L02	1	0.75
	XW2Z-0150BH-L02	1.5	1.25
	XW2Z-0200BH-L02	2	1.75
	XW2Z-0300BH-L02	3	2.75
	XW2Z-0400BH-L02	4	3.75
	XW2Z-0500BH-L02	5	4.75

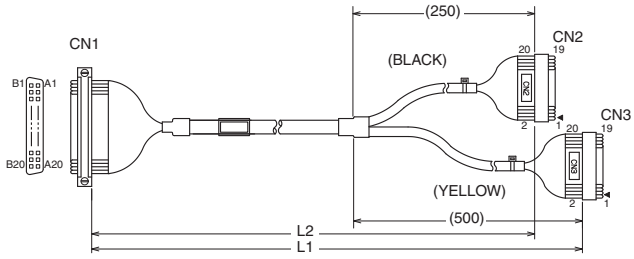

Wiring Diagram

CN 1 : FCN-367J040-AU/FW

Color of insulator	Color of dot	Connector No.
White	Black	B1
Black	White	B2
Yellow	Gray	B3
Red	White	B4
Purple	White	B5
Pink	White	B6
Orange	White	B7
Brown	White	B8
Green	White	B9
Light Green	White	B10
Gray	White	B11
Blue	White	B12
Light Blue	White	B13
White	Red	B14
Black	Orange	B15
Yellow	Red	B16
Red	Yellow	B17
Purple	Yellow	B18
Pink	Yellow	B19
Orange	Yellow	B20

CN 3 : XG4M-2030-T

Connector No.	Color of insulator	Color of dot
20	White	Black
19	Gray	White
18	Black	White
17	Blue	White
16	Yellow	Gray
15	Light Blue	White
14	Red	White
13	White	Red
12	Purple	White
11	Black	Orange
10	Pink	White
9	Yellow	Red
8	Orange	White
7	Red	Yellow
6	Brown	White
5	Purple	Yellow
4	Green	White
3	Pink	Yellow
2	Light Green	White
▶ 1	Orange	Yellow

CN 2 : XG4M-2030-T

Color of insulator	Color of dot	Connector No.
White	–	A1
Black	–	A2
Yellow	–	A3
Red	–	A4
Purple	–	A5
Pink	–	A6
Orange	–	A7
Brown	–	A8
Green	–	A9
Light Green	–	A10
Gray	–	A11
Blue	–	A12
Light Blue	–	A13
White	Yellow	A14
Black	Yellow	A15
Yellow	Black	A16
Red	Black	A17
Purple	Black	A18
Pink	Black	A19
Orange	Black	A20

Connector No.	Color of insulator	Color of dot
20	White	–
19	Gray	–
18	Black	–
17	Blue	–
16	Yellow	–
15	Light Blue	–
14	Red	–
13	White	Yellow
12	Purple	–
11	Black	Yellow
10	Pink	–
9	Yellow	Black
8	Orange	–
7	Red	Black
6	Brown	–
5	Purple	Black
4	Green	–
3	Pink	Black
2	Light Green	–
▶ 1	Orange	Black

XW2Z-□□□□BF-L

Connectors: One 40-pin FCN Connector to One 40-pin MIL Connector

Appearance	Models	Cable length L (m)
	XW2Z-0050BF-L	0.5
	XW2Z-0100BF-L	1
	XW2Z-0150BF-L	1.5
	XW2Z-0200BF-L	2
	XW2Z-0300BF-L	3
	XW2Z-0500BF-L	5
	XW2Z-0700BF-L	7
	XW2Z-1000BF-L	10

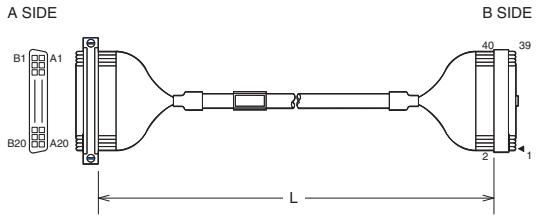

Wiring Diagram

Connector No.		Wire pair No.	Color of insulator	Color of dot	Connector No.	
A SIDE	A1	1	White	–	▶ 1	B SIDE
	B1		White	Black	2	
	A2	2	Black	–	3	
	B2		Black	White	4	
	A3	3	Yellow	–	5	
	B3		Yellow	Gray	6	
	A4	4	Red	–	7	
	B4		Red	White	8	
	A5	5	Purple	–	9	
	B5		Purple	White	10	
	A6	6	Pink	–	11	
	B6		Pink	White	12	
	A7	7	Orange	–	13	
	B7		Orange	White	14	
	A8	8	Brown	–	15	
	B8		Brown	White	16	
	A9	9	Green	–	17	
	B9		Green	White	18	
	A10	10	Light Green	–	19	
	B10		Light Green	White	20	
	A11	11	Gray	–	21	
	B11		Gray	White	22	
	A12	12	Blue	–	23	
	B12		Blue	White	24	
	A13	13	Light Blue	–	25	
	B13		Light Blue	White	26	
	A14	14	White	Yellow	27	
	B14		White	Red	28	
	A15	15	Black	Yellow	29	
	B15		Black	Orange	30	
	A16	16	Yellow	Black	31	
	B16		Yellow	Red	32	
	A17	17	Red	Black	33	
	B17		Red	Yellow	34	
	A18	18	Purple	Black	35	
	B18		Purple	Yellow	36	
	A19	19	Pink	Black	37	
	B19		Pink	Yellow	38	
	A20	20	Orange	Black	39	
	B20		Orange	Yellow	40	

XW2Z-□□□□CJ-L01

Connectors: One 56-pin FCN Connector to Three 20-pin MIL Connectors

Appearance	Models	Cable length L (m)	
		L1	L2
	XW2Z-0150CJ-L01	1.5	1.25
	XW2Z-0200CJ-L01	2	1.75
	XW2Z-0300CJ-L01	3	2.75

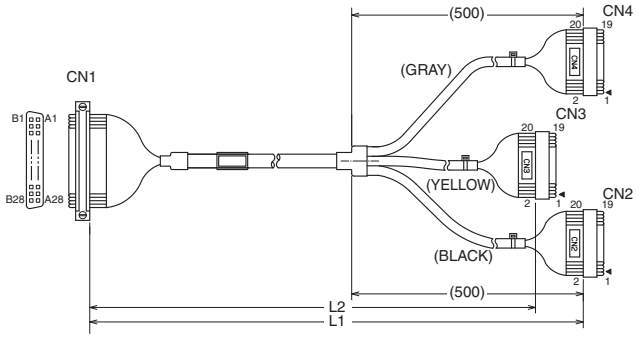

Wiring Diagram

CN 1 : FCN-367J056-AU/FW

Color of insulator	Color of dot	Connector No.
White	Black	B1
Black	White	B2
Yellow	Gray	B3
Red	White	B4
Purple	White	B5
Pink	White	B6
Orange	White	B7
Brown	White	B8
Green	White	B9
Light Green	White	B10
Gray	White	B11
Blue	White	B12
Light Blue	White	B13
White	Red	B14
Black	Orange	B15
Yellow	Red	B16
Red	Yellow	B17
Purple	Yellow	B18
Pink	Yellow	B19
Orange	Yellow	B20
Brown	Yellow	B21
Green	Orange	B22
Light Green	Yellow	B23
Gray	Yellow	B24
Blue	Yellow	B25
Light Blue	Yellow	B26
White	Pink	B27
NC		B28

Color of insulator	Color of dot	Connector No.
White	–	A1
Black	–	A2
Yellow	–	A3
Red	–	A4
Purple	–	A5
Pink	–	A6
Orange	–	A7
Brown	–	A8
Green	–	A9
Light Green	–	A10
Gray	–	A11
Blue	–	A12
Light Blue	–	A13
White	Yellow	A14
Black	Yellow	A15
Yellow	Black	A16
Red	Black	A17
Purple	Black	A18
Pink	Black	A19
Orange	Black	A20
Brown	Black	A21
Green	Black	A22
Light Green	Black	A23
Gray	Black	A24
Blue	Black	A25
Light Blue	Black	A26
White	Purple	A27
NC		A28

CN4 : XG4M-2030-T

Connector No.	Color of insulator	Color of dot
▶ 1	Pink	Black
2	Pink	Yellow
3	Orange	Black
4	Orange	Yellow
5	Brown	Black
6	Brown	Yellow
7	Green	Black
8	Green	Orange
9	Light Green	Black
10	Light Green	Yellow
11	Gray	Black
12	Gray	Yellow
13	Blue	Black
14	Blue	Yellow
15	Light Blue	Black
16	Light Blue	Yellow
17	White	Purple
18	White	Pink
19	NC	
20	NC	

CN 3 : XG4M-2030-T

Connector No.	Color of insulator	Color of dot
▶ 1	Light Green	–
2	Light Green	White
3	Gray	–
4	Gray	White
5	Blue	–
6	Blue	White
7	Light Blue	–
8	Light Blue	White
9	White	Yellow
10	White	Red
11	Black	Yellow
12	Black	Orange
13	Yellow	Black
14	Yellow	Red
15	Red	Black
16	Red	Yellow
17	Purple	Black
18	Purple	Yellow
19	NC	
20	NC	

CN 2 : XG4M-2030-T

Connector No.	Color of insulator	Color of dot
▶ 1	White	–
2	White	Black
3	Black	–
4	Black	White
5	Yellow	–
6	Yellow	Gray
7	Red	–
8	Red	White
9	Purple	–
10	Purple	White
11	Pink	–
12	Pink	White
13	Orange	–
14	Orange	White
15	Brown	–
16	Brown	White
17	Green	–
18	Green	White
19	NC	
20	NC	

XW2Z-□□□□CJ-L02

Connectors: One 56-pin FCN Connector to Three 20-pin MIL Connectors

Appearance	Models	Cable length L (m)		
		L1	L2	L3
	XW2Z-0150CJ-L02	1.5	1.25	1
	XW2Z-0200CJ-L02	2	1.75	1.5
	XW2Z-0300CJ-L02	3	2.75	2.5

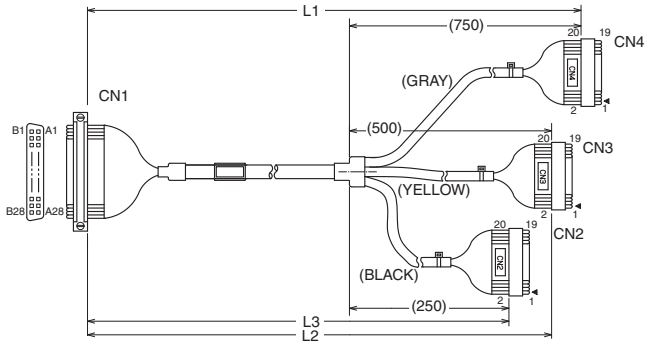

Wiring Diagram

CN 1 : FCN-367J056-AU/FW

Color of insulator	Color of dot	Connector No.
White	Black	B1
Black	White	B2
Yellow	Gray	B3
Red	White	B4
Purple	White	B5
Pink	White	B6
Orange	White	B7
Brown	White	B8
Green	White	B9
Light Green	White	B10
Gray	White	B11
Blue	White	B12
Light Blue	White	B13
White	Red	B14
Black	Orange	B15
Yellow	Red	B16
Red	Yellow	B17
Purple	Yellow	B18
Pink	Yellow	B19
Orange	Yellow	B20
Brown	Yellow	B21
Green	Orange	B22
Light Green	Yellow	B23
Gray	Yellow	B24
Blue	Yellow	B25
Light Blue	Yellow	B26
White	Pink	B27
NC		B28

Color of insulator	Color of dot	Connector No.
White	–	A1
Black	–	A2
Yellow	–	A3
Red	–	A4
Purple	–	A5
Pink	–	A6
Orange	–	A7
Brown	–	A8
Green	–	A9
Light Green	–	A10
Gray	–	A11
Blue	–	A12
Light Blue	–	A13
White	Yellow	A14
Black	Yellow	A15
Yellow	Black	A16
Red	Black	A17
Purple	Black	A18
Pink	Black	A19
Orange	Black	A20
Brown	Black	A21
Green	Black	A22
Light Green	Black	A23
Gray	Black	A24
Blue	Black	A25
Light Blue	Black	A26
White	Purple	A27
NC		A28

CN4 : XG4M-2030-T

Connector No.	Color of insulator	Color of dot
20	Pink	Black
19	Pink	Yellow
18	Orange	Black
17	Orange	Yellow
16	Brown	Black
15	Brown	Yellow
14	Green	Black
13	Green	Orange
12	Light Green	Black
11	Light Green	Yellow
10	Gray	Black
9	Gray	Yellow
8	Blue	Black
7	Blue	Yellow
6	Light Blue	Black
5	Light Blue	Yellow
4	White	Purple
3	NC	
2	NC	
▶ 1	White	Pink

CN 3 : XG4M-2030-T

Connector No.	Color of insulator	Color of dot
20	Light Green	–
19	Light Green	White
18	Gray	–
17	Gray	White
16	Blue	–
15	Blue	White
14	Light Blue	–
13	Light Blue	White
12	White	Yellow
11	White	Red
10	Black	Yellow
9	Black	Orange
8	Yellow	Black
7	Yellow	Red
6	Red	Black
5	Red	Yellow
4	Purple	Black
3	NC	
2	NC	
▶ 1	Purple	Yellow

CN 2 : XG4M-2030-T

Connector No.	Color of insulator	Color of dot
20	White	–
19	White	Black
18	Black	–
17	Black	White
16	Yellow	–
15	Yellow	Gray
14	Red	–
13	Red	White
12	Purple	–
11	Purple	White
10	Pink	–
9	Pink	White
8	Orange	–
7	Orange	White
6	Brown	–
5	Brown	White
4	Green	–
3	NC	
2	NC	
▶ 1	Green	White

XW2Z-□□□□CK-L0□

Connectors: One 56-pin FCN Connector to One 40-pin MIL Connector, plus One 20-pin MIL Connector

Appearance	Models	Cable length L (m)	
		L1	L2
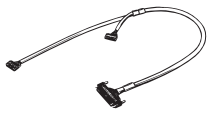	XW2Z-0150CK-L01	1.5	1.25
	XW2Z-0150CK-L02	1.5	1.25
	XW2Z-0200CK-L01	2	1.75
	XW2Z-0200CK-L02	2	1.75

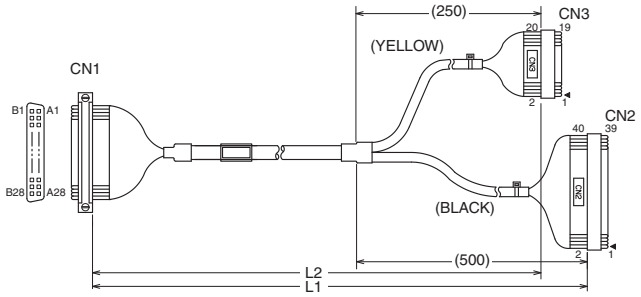

Wiring Diagram

XW2Z-0150CK-L01, XW2Z-0200CK-L01

CN 1 : FCN-367J056-AU/FW

Color of insulator	Color of dot	Connector No.
White	Black	B1
Black	White	B2
Yellow	Gray	B3
Red	White	B4
Purple	White	B5
Pink	White	B6
Orange	White	B7
Brown	White	B8
Green	White	B9
Light Green	White	B10
Gray	White	B11
Blue	White	B12
Light Blue	White	B13
White	Red	B14
Black	Orange	B15
Yellow	Red	B16
Red	Yellow	B17
Purple	Yellow	B18
Pink	Yellow	B19
Orange	Yellow	B20
Brown	Yellow	B21
Green	Orange	B22
Light Green	Yellow	B23
Gray	Yellow	B24
Blue	Yellow	B25
Light Blue	Yellow	B26
White	Pink	B27
NC		B28

Color of insulator	Color of dot	Connector No.
White	–	A1
Black	–	A2
Yellow	–	A3
Red	–	A4
Purple	–	A5
Pink	–	A6
Orange	–	A7
Brown	–	A8
Green	–	A9
Light Green	–	A10
Gray	–	A11
Blue	–	A12
Light Blue	–	A13
White	Yellow	A14
Black	Yellow	A15
Yellow	Black	A16
Red	Black	A17
Purple	Black	A18
Pink	Black	A19
Orange	Black	A20
Brown	Black	A21
Green	Black	A22
Light Green	Black	A23
Gray	Black	A24
Blue	Black	A25
Light Blue	Black	A26
White	Purple	A27
NC		A28

CN3 : XG4M-2030-T

Connector No.	Color of insulator	Color of dot
▶ 1	Pink	Black
2	Pink	Yellow
3	Orange	Black
4	Orange	Yellow
5	Brown	Black
6	Brown	Yellow
7	Green	Black
8	Green	Orange
9	Light Green	Black
10	Light Green	Yellow
11	Gray	Black
12	Gray	Yellow
13	Blue	Black
14	Blue	Yellow
15	Light Blue	Black
16	Light Blue	Yellow
17	White	Purple
18	White	Pink
19	NC	
20	NC	

CN2 : XG4M-4030-T

Connector No.	Color of insulator	Color of dot
▶ 1	White	–
2	White	Black
3	Black	–
4	Black	White
5	Yellow	–
6	Yellow	Gray
7	Red	–
8	Red	White
9	Purple	–
10	Purple	White
11	Pink	–
12	Pink	White
13	Orange	–
14	Orange	White
15	Brown	–
16	Brown	White
17	Green	–
18	Green	White
19	NC	
20	NC	
21	Light Green	–
22	Light Green	White
23	Gray	–
24	Gray	White
25	Blue	–
26	Blue	White
27	Light Blue	–
28	Light Blue	White
29	White	Yellow
30	White	Red
31	Black	Yellow
32	Black	Orange
33	Yellow	Black
34	Yellow	Red
35	Red	Black
36	Red	Yellow
37	Purple	Black
38	Purple	Yellow
39	NC	
40	NC	

Wiring Diagram

XW2Z-0150CK-L02, XW2Z-0200CK-L02

CN 1 : FCN-367J056-AU/FW

Color of insulator	Color of dot	Connector No.
White	Black	B1
Black	White	B2
Yellow	Gray	B3
Red	White	B4
Purple	White	B5
Pink	White	B6
Orange	White	B7
Brown	White	B8
Green	White	B9
Light Green	White	B10
Gray	White	B11
Blue	White	B12
Light Blue	White	B13
White	Red	B14
Black	Orange	B15
Yellow	Red	B16
Red	Yellow	B17
Purple	Yellow	B18
Pink	Yellow	B19
Orange	Yellow	B20
Brown	Yellow	B21
Green	Orange	B22
Light Green	Yellow	B23
Gray	Yellow	B24
Blue	Yellow	B25
Light Blue	Yellow	B26
White	Pink	B27
NC		B28

Color of insulator	Color of dot	Connector No.
White	–	A1
Black	–	A2
Yellow	–	A3
Red	–	A4
Purple	–	A5
Pink	–	A6
Orange	–	A7
Brown	–	A8
Green	–	A9
Light Green	–	A10
Gray	–	A11
Blue	–	A12
Light Blue	–	A13
White	Yellow	A14
Black	Yellow	A15
Yellow	Black	A16
Red	Black	A17
Purple	Black	A18
Pink	Black	A19
Orange	Black	A20
Brown	Black	A21
Green	Black	A22
Light Green	Black	A23
Gray	Black	A24
Blue	Black	A25
Light Blue	Black	A26
White	Purple	A27
NC		A28

CN3 : XG4M-2030-T

Connector No.	Color of insulator	Color of dot
▶ 1	White	Pink
2	NC	
3	NC	
4	White	Purple
5	Light Blue	Yellow
6	Light Blue	Black
7	Blue	Yellow
8	Blue	Black
9	Gray	Yellow
10	Gray	Black
11	Light Green	Yellow
12	Light Green	Black
13	Green	Orange
14	Green	Black
15	Brown	Yellow
16	Brown	Black
17	Orange	Yellow
18	Orange	Black
19	Pink	Yellow
20	Pink	Black

CN2 : XG4M-4030-T

Connector No.	Color of insulator	Color of dot
▶ 1	Green	White
2	NC	
3	NC	
4	Green	–
5	Brown	White
6	Brown	–
7	Orange	White
8	Orange	–
9	Pink	White
10	Pink	–
11	Purple	White
12	Purple	–
13	Red	White
14	Red	–
15	Yellow	Gray
16	Yellow	–
17	Black	White
18	Black	–
19	White	Black
20	White	–
21	Purple	Yellow
22	NC	
23	NC	
24	Purple	Black
25	Red	Yellow
26	Red	Black
27	Yellow	Red
28	Yellow	Black
29	Black	Orange
30	Black	Yellow
31	White	Red
32	White	Yellow
33	Light Blue	White
34	Light Blue	–
35	Blue	White
36	Blue	–
37	Gray	White
38	Gray	–
39	Light Green	White
40	Light Green	–

XW2Z-□□□□CG-L

Connectors: One 56-pin FCN Connector to One 60-pin MIL Connector

Appearance	Models	Cable length L (m)
	XW2Z-0100CG-L	1
	XW2Z-0200CG-L	2
	XW2Z-0300CG-L	3

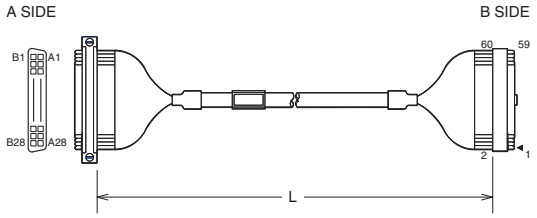

Wiring Diagram

Connector No.		Cable core No.	Color of insulator	Color of dot	Connector No.	
A SIDE	A1	1	White	–	▶ 1	B SIDE
	B1		White	Black	2	
	A2	2	Black	–	3	
	B2		Black	White	4	
	A3	3	Yellow	–	5	
	B3		Yellow	Gray	6	
	A4	4	Red	–	7	
	B4		Red	White	8	
	A5	5	Purple	–	9	
	B5		Purple	White	10	
	A6	6	Pink	–	11	
	B6		Pink	White	12	
	A7	7	Orange	–	13	
	B7		Orange	White	14	
	A8	8	Brown	–	15	
	B8		Brown	White	16	
	A9	9	Green	–	17	
	B9		Green	White	18	
	A10	10	Light Green	–	19	
	B10		Light Green	White	20	
	A11	11	Gray	–	21	
	B11		Gray	White	22	
	A12	12	Blue	–	23	
	B12		Blue	White	24	
	A13	13	Light Blue	–	25	
	B13		Light Blue	White	26	
	A14	14	White	Yellow	27	
	B14		White	Red	28	
	A15	15	Black	Yellow	29	
	B15		Black	Orange	30	
	A16	16	Yellow	Black	31	
	B16		Yellow	Red	32	
	A17	17	Red	Black	33	
	B17		Red	Yellow	34	
	A18	18	Purple	Black	35	
	B18		Purple	Yellow	36	
	A19	19	Pink	Black	37	
	B19		Pink	Yellow	38	
	A20	20	Orange	Black	39	
	B20		Orange	Yellow	40	
	A21	21	Brown	Black	41	
	B21		Brown	Yellow	42	
	A22	22	Green	Black	43	
	B22		Green	Orange	44	
	A23	23	Light Green	Black	45	
	B23		Light Green	Yellow	46	
	A24	24	Gray	Black	47	
	B24		Gray	Yellow	48	
	A25	25	Blue	Black	49	
	B25		Blue	Yellow	50	
	A26	26	Light Blue	Black	51	
	B26		Light Blue	Yellow	52	
	A27	27	White	Purple	53	
	B27		White	Pink	54	
	A28	28	NC		55	
	B28		NC		56	
	–	29	NC		57	
	–		NC		58	
	–	30	NC		59	
	–		NC		60	

XW2Z-□□□□DD-L

Connectors: One 20-pin MIL Connector to One 20-pin MIL Connector

Appearance	Models	Cable length L (m)
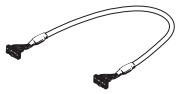	XW2Z-0050DD-L	0.5
	XW2Z-0100DD-L	1
	XW2Z-0200DD-L	2

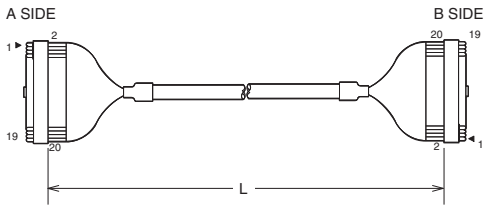

Wiring Diagram

Connector No.		Wire pair No.	Color of insulator	Color of dot	Connector No.	
A SIDE	▶ 1	1	White	–	▶ 1	B SIDE
	2		White	Black	2	
	3	2	Black	–	3	
	4		Black	White	4	
	5	3	Yellow	–	5	
	6		Yellow	Gray	6	
	7	4	Red	–	7	
	8		Red	White	8	
	9	5	Purple	–	9	
	10		Purple	White	10	
	11	6	Pink	–	11	
	12		Pink	White	12	
	13	7	Orange	–	13	
	14		Orange	White	14	
	15	8	Brown	–	15	
	16		Brown	White	16	
	17	9	Green	–	17	
	18		Green	White	18	
	19	10	Light Green	–	19	
	20		Light Green	White	20	

XW2Z-□□□□EE-L

Connectors: One 34-pin MIL Connector to One 34-pin MIL Connector

Appearance	Model	Cable length L (m)
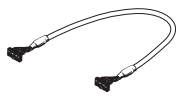	XW2Z-0050EE-L	0.5
	XW2Z-0100EE-L	1
	XW2Z-0150EE-L	1.5
	XW2Z-0200EE-L	2
	XW2Z-0300EE-L	3
	XW2Z-0500EE-L	5
	XW2Z-0700EE-L	7
	XW2Z-1000EE-L	10

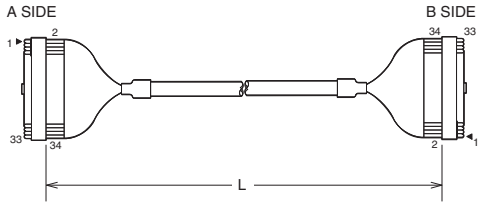

Wiring Diagram

Connector No.		Wire pair No.	Color of insulator	Color of dot	Connector No.	
A SIDE	▶1	1	White	–	▶1	B SIDE
	2		White	Black	2	
	3	2	Black	–	3	
	4		Black	White	4	
	5	3	Yellow	–	5	
	6		Yellow	Gray	6	
	7	4	Red	–	7	
	8		Red	White	8	
	9	5	Purple	–	9	
	10		Purple	White	10	
	11	6	Pink	–	11	
	12		Pink	White	12	
	13	7	Orange	–	13	
	14		Orange	White	14	
	15	8	Brown	–	15	
	16		Brown	White	16	
	17	9	Green	–	17	
	18		Green	White	18	
	19	10	Light Green	–	19	
	20		Light Green	White	20	
	21	11	Gray	–	21	
	22		Gray	White	22	
	23	12	Blue	–	23	
	14		Blue	White	24	
	25	13	Light Blue	–	25	
	26		Light Blue	White	26	
	27	14	White	Yellow	27	
	28		White	Red	28	
	29	15	Black	Yellow	29	
	30		Black	Orange	30	
	31	16	Yellow	Black	31	
	32		Yellow	Red	32	
	33	17	Red	Black	33	
	34		Red	Yellow	34	

XW2Z-□□□□FH-L01

Connectors: One 40-pin MIL Connector to Two 20-pin MIL Connectors

Appearance	Models	Cable length L (m)	
		L1	L2
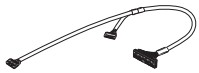	XW2Z-0075FH-L01	0.75	0.5
	XW2Z-0100FH-L01	1	0.75
	XW2Z-0200FH-L01	2	1.75
	XW2Z-0300FH-L01	3	2.75
	XW2Z-0500FH-L01	5	4.75

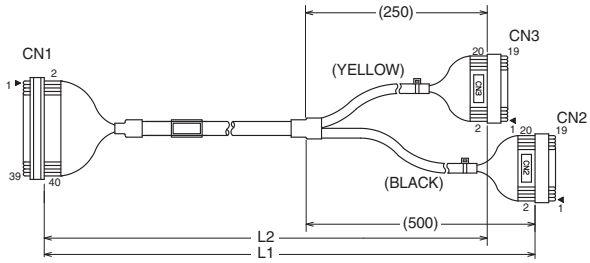

Wiring Diagram

CN 1 : XG4M-4030-T

Color of insulator	Color of dot	Connector No.
Orange	Yellow	40
Orange	Black	39
Pink	Yellow	38
Pink	Black	37
Purple	Yellow	36
Purple	Black	35
Red	Yellow	34
Red	Black	33
Yellow	Red	32
Yellow	Black	31
Black	Orange	30
Black	Yellow	29
White	Red	28
White	Yellow	27
Light Blue	White	26
Light Blue	–	25
Blue	White	24
Blue	–	23
Gray	White	22
Gray	–	21

CN2 : XG4M-2030-T

Connector No.	Color of insulator	Color of dot
▶1	Orange	Yellow
2	Orange	Black
3	Pink	Yellow
4	Pink	Black
5	Purple	Yellow
6	Purple	Black
7	Red	Yellow
8	Red	Black
9	Yellow	Red
10	Yellow	Black
11	Black	Orange
12	Black	Yellow
13	White	Red
14	White	Yellow
15	Light Blue	White
16	Light Blue	–
17	Blue	White
18	Blue	–
19	Gray	White
20	Gray	–

Color of insulator	Color of dot	Connector No.
Light Green	White	20
Light Green	–	19
Green	White	18
Green	–	17
Brown	White	16
Brown	–	15
Orange	White	14
Orange	–	13
Pink	White	12
Pink	–	11
Purple	White	10
Purple	–	9
Red	White	8
Red	–	7
Yellow	Gray	6
Yellow	–	5
Black	White	4
Black	–	3
White	Black	2
White	–	▶1

CN 3 : XG4M-2030-T

Connector No.	Color of insulator	Color of dot
▶1	Light Green	White
2	Light Green	–
3	Green	White
4	Green	–
5	Brown	White
6	Brown	–
7	Orange	White
8	Orange	–
9	Pink	White
10	Pink	–
11	Purple	White
12	Purple	–
13	Red	White
14	Red	–
15	Yellow	Gray
16	Yellow	–
17	Black	White
18	Black	–
19	White	Black
20	White	–

XW2Z-□□□□FH-L02

Connectors: One 40-pin MIL Connector to Two 20-pin MIL Connectors

Appearance	Models	Cable length L (m)	
		L1	L2
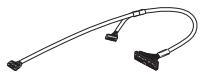	XW2Z-0075FH-L02	0.75	0.5
	XW2Z-0100FH-L02	1	0.75
	XW2Z-0200FH-L02	2	1.75
	XW2Z-0300FH-L02	3	2.75
	XW2Z-0500FH-L02	5	4.75

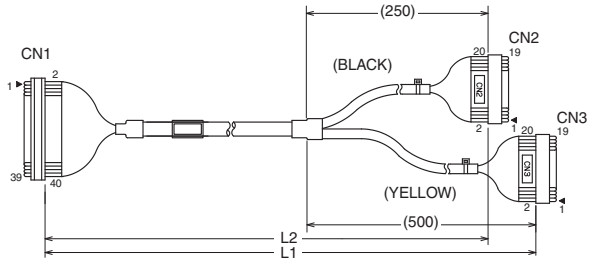

Wiring Diagram

CN 1 : XG4M-4030-T

Color of insulator	Color of dot	Connector No.
Orange	Yellow	40
Orange	Black	39
Pink	Yellow	38
Pink	Black	37
Purple	Yellow	36
Purple	Black	35
Red	Yellow	34
Red	Black	33
Yellow	Red	32
Yellow	Black	31
Black	Orange	30
Black	Yellow	29
White	Red	28
White	Yellow	27
Light Blue	White	26
Light Blue	–	25
Blue	White	24
Blue	–	23
Gray	White	22
Gray	–	21

CN2 : XG4M-2030-T

Connector No.	Color of insulator	Color of dot
20	Orange	Yellow
19	Orange	Black
18	Pink	Yellow
17	Pink	Black
16	Purple	Yellow
15	Purple	Black
14	Red	Yellow
13	Red	Black
12	Yellow	Red
11	Yellow	Black
10	Black	Orange
9	Black	Yellow
8	White	Red
7	White	Yellow
6	Light Blue	White
5	Light Blue	–
4	Blue	White
3	Blue	–
2	Gray	White
▶1	Gray	–

CN 3 : XG4M-2030-T

Color of insulator	Color of dot	Connector No.
Light Green	White	20
Light Green	–	19
Green	White	18
Green	–	17
Brown	White	16
Brown	–	15
Orange	White	14
Orange	–	13
Pink	White	12
Pink	–	11
Purple	White	10
Purple	–	9
Red	White	8
Red	–	7
Yellow	Gray	6
Yellow	–	5
Black	White	4
Black	–	3
White	Black	2
White	–	▶1

Connector No.	Color of insulator	Color of dot
20	Light Green	White
19	Light Green	–
18	Green	White
17	Green	–
16	Brown	White
15	Brown	–
14	Orange	White
13	Orange	–
12	Pink	White
11	Pink	–
10	Purple	White
9	Purple	–
8	Red	White
7	Red	–
6	Yellow	Gray
5	Yellow	–
4	Black	White
3	Black	–
2	White	Black
▶1	White	–

XW2Z-□□□□FF-L

Connectors: One 40-pin MIL Connector to One 40-pin MIL Connector

Appearance	Models	Cable length L (m)
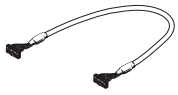	XW2Z-0030FF-L	0.3
	XW2Z-0050FF-L	0.5
	XW2Z-0100FF-L	1
	XW2Z-0150FF-L	1.5
	XW2Z-0200FF-L	2
	XW2Z-0300FF-L	3
	XW2Z-0500FF-L	5
	XW2Z-0700FF-L	7
	XW2Z-1000FF-L	10

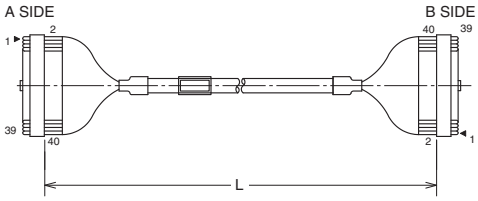

Wiring Diagram

Connector No.		Wire pair No.	Color of insulator	Color of dot	Connector No.	
A SIDE	▶1	1	White	–	▶1	B SIDE
	2		White	Black	2	
	3	2	Black	–	3	
	4		Black	White	4	
	5	3	Yellow	–	5	
	6		Yellow	Gray	6	
	7	4	Red	–	7	
	8		Red	White	8	
	9	5	Purple	–	9	
	10		Purple	White	10	
	11	6	Pink	–	11	
	12		Pink	White	12	
	13	7	Orange	–	13	
	14		Orange	White	14	
	15	8	Brown	–	15	
	16		Brown	White	16	
	17	9	Green	–	17	
	18		Green	White	18	
	19	10	Light Green	–	19	
	20		Light Green	White	20	
	21	11	Gray	–	21	
	22		Gray	White	22	
	23	12	Blue	–	23	
	24		Blue	White	24	
	25	13	Light Blue	–	25	
	26		Light Blue	White	26	
	27	14	White	Yellow	27	
	28		White	Red	28	
	29	15	Black	Yellow	29	
	30		Black	Orange	30	
	31	16	Yellow	Black	31	
	32		Yellow	Red	32	
	33	17	Red	Black	33	
	34		Red	Yellow	34	
	35	18	Purple	Black	35	
	36		Purple	Yellow	36	
	37	19	Pink	Black	37	
	38		Pink	Yellow	38	
	39	20	Orange	Black	39	
	40		Orange	Yellow	40	

Safety Precautions

Precautions for Correct Use

● Bending Radius of Connecting Cables

- To prevent damaging the Connecting Cables, use the following minimum bending radii as guidelines.

XW2Z-□□□□□□-□□□

End of model number	Minimum bending radius
AD-L	54mm
DD-L	
BH-L01, BH-L02	66mm
BF-L	
EE-L	
FH-L01, FH-L02	
FF-L	
CJ-L01, CJ-L02	80mm
CK-L01, CK-L02	
CG-L	

Vertical Screw Mounting

Type	Connected PLC manufacturer	Wiring method	Mounted connector type and model		Number of poles	Model	Dimension A	Dimension B	Reference dimensions diagram, pattern 1	Reference wiring diagram
PLC connection	OMRON	Phillips screws	MIL	**XG4A-4031**	34	**(XW2R-J34GV-C1)**	130.7	122.2	①	Page 20
PLC connection	OMRON	Phillips screws	MIL	**XG4A-4031**	34	**(XW2R-J34GV-C2)**	130.7	122.2	①	Page 20
PLC connection	OMRON	Phillips screws	MIL	**XG4A-4031**	34	**(XW2R-J34GV-C3)**	130.7	122.2	①	Page 20
PLC connection	OMRON	Phillips screws	MIL	**XG4A-4031**	34	**(XW2R-J34GV-C4)**	130.7	122.2	①	Page 20
PLC connection	OMRON	Slotted screws	MIL	**XG4A-4031**	34	**(XW2R-E34GV-C1)**	98.5	90	②	Page 21
PLC connection	OMRON	Slotted screws	MIL	**XG4A-4031**	34	**(XW2R-E34GV-C2)**	98.5	90	②	Page 21
PLC connection	OMRON	Slotted screws	MIL	**XG4A-4031**	34	**(XW2R-E34GV-C3)**	98.5	90	②	Page 21
PLC connection	OMRON	Slotted screws	MIL	**XG4A-4031**	34	**(XW2R-E34GV-C4)**	98.5	90	②	Page 21
PLC connection	OMRON	Push-in spring	MIL	**XG4A-4031**	34	**(XW2R-P34GV-C1)**	98.5	90	③	Page 22
PLC connection	OMRON	Push-in spring	MIL	**XG4A-4031**	34	**(XW2R-P34GV-C2)**	98.5	90	③	Page 22
PLC connection	OMRON	Push-in spring	MIL	**XG4A-4031**	34	**(XW2R-P34GV-C3)**	98.5	90	③	Page 22
PLC connection	OMRON	Push-in spring	MIL	**XG4A-4031**	34	**(XW2R-P34GV-C4)**	98.5	90	③	Page 22
PLC connection	OMRON	Push-in spring	MIL	**XG4A-2031**	16	**(XW2R-P16GV-C1-COM)**	98.5	90	④	Page 16
PLC connection	OMRON	Push-in spring	MIL	**XG4A-2031**	16	**(XW2R-P16GV-C3-COM)**	98.5	90	④	Page 16
PLC connection	OMRON	Push-in spring	MIL	**XG4A-4031**	32	**(XW2R-P32GV-C1-COM)**	186.7	178.2	④	Page 16
PLC connection	OMRON	Push-in spring	MIL	**XG4A-4031**	32	**(XW2R-P32GV-C2-COM)**	186.7	178.2	④	Page 16
PLC connection	OMRON	Push-in spring	MIL	**XG4A-4031**	32	**(XW2R-P32GV-C3-COM)**	186.7	178.2	④	Page 16
PLC connection	OMRON	Push-in spring	MIL	**XG4A-4031**	32	**(XW2R-P32GV-C4-COM)**	186.7	178.2	④	Page 16
PLC connection	Mitsubishi	Phillips screws	MIL	**XG4A-4031**	34	**(XW2R-J34GV-M1)**	130.7	122.2	①	Page 29
PLC connection	Mitsubishi	Phillips screws	MIL	**XG4A-4031**	34	**(XW2R-J34GV-M2)**	130.7	122.2	①	Page 29
PLC connection	Mitsubishi	Slotted screws	MIL	**XG4A-4031**	34	**(XW2R-E34GV-M1)**	98.5	90	②	Page 30
PLC connection	Mitsubishi	Slotted screws	MIL	**XG4A-4031**	34	**(XW2R-E34GV-M2)**	98.5	90	②	Page 30
PLC connection	Mitsubishi	Push-in spring	MIL	**XG4A-4031**	34	**(XW2R-P34GV-M1)**	98.5	90	③	Page 31
PLC connection	Mitsubishi	Push-in spring	MIL	**XG4A-4031**	34	**(XW2R-P34GV-M2)**	98.5	90	③	Page 31
PLC connection	Keyence	Phillips screws	MIL	**XG4A-3431**	34	**(XW2R-J34GV-K1)**	130.7	122.2	①	Page 35
PLC connection	Keyence	Phillips screws	MIL	**XG4A-4031**	40	**(XW2R-J40GV-K2)**	151.7	143.2	①	Page 35
PLC connection	Keyence	Push-in spring	MIL	**XG4A-3431**	34	**(XW2R-P34GV-K1)**	98.5	90	③	Page 36
PLC connection	Keyence	Push-in spring	MIL	**XG4A-4031**	40	**(XW2R-P40GV-K2)**	113.5	105	③	Page 36
General-purpose	–	Phillips screws	MIL	**XG4A-2031**	20	**(XW2R-J20GV-T)**	81.7	73.2	①	Page 41
General-purpose	–	Phillips screws	MIL	**XG4A-3431**	34	**(XW2R-J34GV-T)**	130.7	122.2	①	Page 41
General-purpose	–	Phillips screws	MIL	**XG4A-4031**	40	**(XW2R-J40GV-T)**	151.7	143.2	①	Page 41
General-purpose	–	Phillips screws	MIL	**XG4A-5031**	50	**(XW2R-J50GV-T)**	186.7	178.2	①	Page 41
General-purpose	–	Phillips screws	MIL	**XG4A-6031**	60	**(XW2R-J60GV-T)**	221.7	213.2	①	Page 41
General-purpose	–	Phillips screws	FCN	**FCN-364P040-AU**	40	**(XW2R-J40FV-T)**	151.7	143.2	①	Page 41
General-purpose	–	Slotted screws	MIL	**XG4A-2031**	20	**(XW2R-E20GV-T)**	64.4	55.9	②	Page 42
General-purpose	–	Slotted screws	MIL	**XG4A-3431**	34	**(XW2R-E34GV-T)**	98.5	90	②	Page 42
General-purpose	–	Slotted screws	MIL	**XG4A-4031**	40	**(XW2R-E40GV-T)**	113.5	105	②	Page 42
General-purpose	–	Slotted screws	MIL	**XG4A-5031**	50	**(XW2R-E50GV-T)**	138.5	130	②	Page 42
General-purpose	–	Slotted screws	MIL	**XG4A-6031**	60	**(XW2R-E60GV-T)**	163.5	155	②	Page 42
General-purpose	–	Slotted screws	FCN	**FCN-364P040-AU**	40	**(XW2R-E40FV-T)**	113.5	105	②	Page 42
General-purpose	–	Push-in spring	MIL	**XG4A-2031**	20	**(XW2R-P20GV-T)**	64.4	55.9	③	Page 43
General-purpose	–	Push-in spring	MIL	**XG4A-3431**	34	**(XW2R-P34GV-T)**	98.5	90	③	Page 43
General-purpose	–	Push-in spring	MIL	**XG4A-4031**	40	**(XW2R-P40GV-T)**	113.5	105	③	Page 43
General-purpose	–	Push-in spring	MIL	**XG4A-5031**	50	**(XW2R-P50GV-T)**	138.5	130	③	Page 43
General-purpose	–	Push-in spring	MIL	**XG4A-6031**	60	**(XW2R-P60GV-T)**	163.5	155	③	Page 43
General-purpose	–	Push-in spring	FCN	**FCN-364P040-AU**	40	**(XW2R-P40FV-T)**	113.5	105	③	Page 43
PLC connection	Mitsubishi	MIL connector relay	MIL	**XG4A-4031**	40	**(XW2R-G32GV-M1-COM)**	98.5	90	⑤	Page 25
General-purpose	–	e-CON	MIL	**XG4A-1431**	14	**(XW2R-N08GV-COM)**	64.4	55.9	⑥	Page 39

Please consult your OMRON representative for the marketing dates for model in parentheses.

All models can be mounted to DIN track. For details, refer to page 9.

Reference Dimensions Diagram Patterns

(Unit: mm)

①

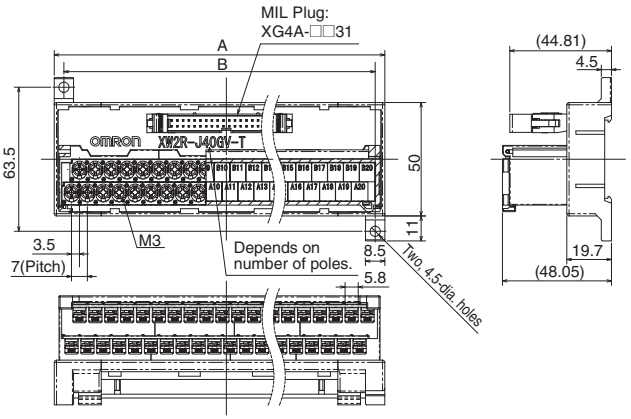

②

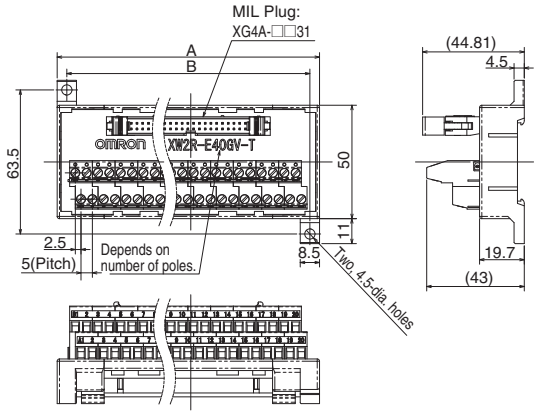

③

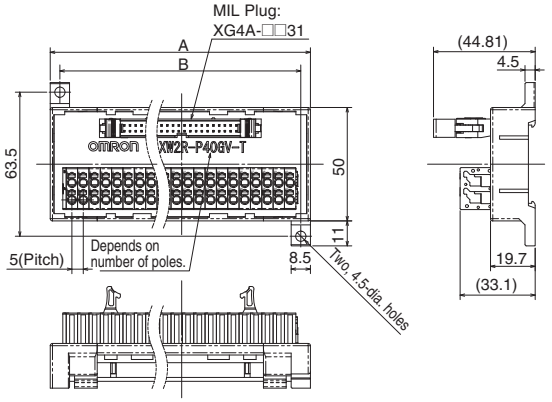

④

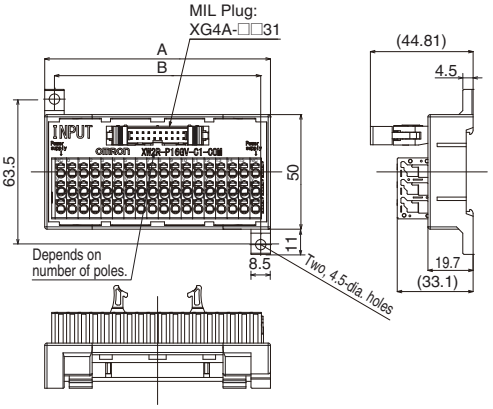

⑤

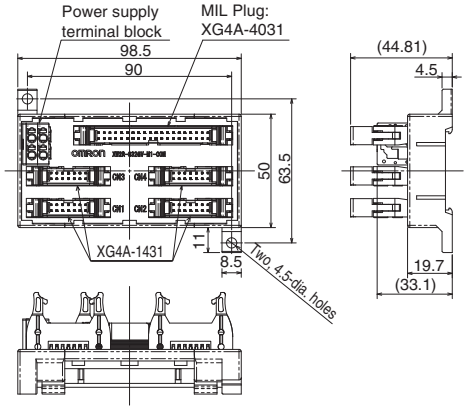

⑥

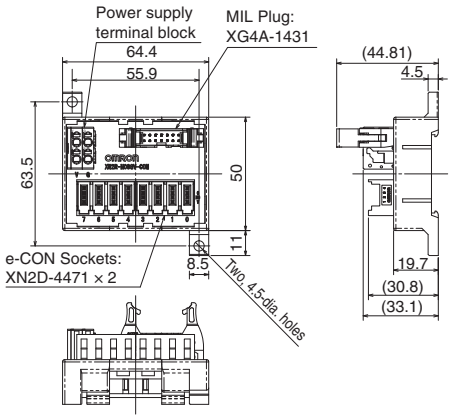

Horizontal Screw Mounting

Type	Connected PLC manufacturer	Wiring method	Mounted connector type and model		Number of poles	Model	Dimension A	Dimension B	Reference dimensions diagram, pattern 1	Reference wiring diagram
PLC connection	OMRON	Phillips screws	MIL	**XG4A-4031**	34	**XW2R-J34G-C1**	130.7	140.2	①	Page 20
PLC connection	OMRON	Phillips screws	MIL	**XG4A-4031**	34	**XW2R-J34G-C2**	130.7	140.2	①	Page 20
PLC connection	OMRON	Phillips screws	MIL	**XG4A-4031**	34	**XW2R-J34G-C3**	130.7	140.2	①	Page 20
PLC connection	OMRON	Phillips screws	MIL	**XG4A-4031**	34	**XW2R-J34G-C4**	130.7	140.2	①	Page 20
PLC connection	OMRON	Slotted screws	MIL	**XG4A-4031**	34	**XW2R-E34G-C1**	98.5	108	②	Page 21
PLC connection	OMRON	Slotted screws	MIL	**XG4A-4031**	34	**XW2R-E34G-C2**	98.5	108	②	Page 21
PLC connection	OMRON	Slotted screws	MIL	**XG4A-4031**	34	**XW2R-E34G-C3**	98.5	108	②	Page 21
PLC connection	OMRON	Slotted screws	MIL	**XG4A-4031**	34	**XW2R-E34G-C4**	98.5	108	②	Page 21
PLC connection	OMRON	Push-in spring	MIL	**XG4A-4031**	34	**XW2R-P34G-C1**	98.5	108	③	Page 22
PLC connection	OMRON	Push-in spring	MIL	**XG4A-4031**	34	**XW2R-P34G-C2**	98.5	108	③	Page 22
PLC connection	OMRON	Push-in spring	MIL	**XG4A-4031**	34	**XW2R-P34G-C3**	98.5	108	③	Page 22
PLC connection	OMRON	Push-in spring	MIL	**XG4A-4031**	34	**XW2R-P34G-C4**	98.5	108	③	Page 22
PLC connection	OMRON	Push-in spring	MIL	**XG4A-2031**	16	**XW2R-P16G-C1-COM**	98.5	108	④	Page 16
PLC connection	OMRON	Push-in spring	MIL	**XG4A-2031**	16	**XW2R-P16G-C3-COM**	98.5	108	④	Page 16
PLC connection	OMRON	Push-in spring	MIL	**XG4A-4031**	32	**XW2R-P32G-C1-COM**	186.7	196.2	④	Page 16
PLC connection	OMRON	Push-in spring	MIL	**XG4A-4031**	32	**XW2R-P32G-C2-COM**	186.7	196.2	④	Page 16
PLC connection	OMRON	Push-in spring	MIL	**XG4A-4031**	32	**XW2R-P32G-C3-COM**	186.7	196.2	④	Page 16
PLC connection	OMRON	Push-in spring	MIL	**XG4A-4031**	32	**XW2R-P32G-C4-COM**	186.7	196.2	④	Page 16
PLC connection	Mitsubishi	Phillips screws	MIL	**XG4A-4031**	34	**XW2R-J34G-M1**	130.7	140.2	①	Page 29
PLC connection	Mitsubishi	Phillips screws	MIL	**XG4A-4031**	34	**XW2R-J34G-M2**	130.7	140.2	①	Page 29
PLC connection	Mitsubishi	Slotted screws	MIL	**XG4A-4031**	34	**XW2R-E34G-M1**	98.5	108	②	Page 30
PLC connection	Mitsubishi	Slotted screws	MIL	**XG4A-4031**	34	**XW2R-E34G-M2**	98.5	108	②	Page 30
PLC connection	Mitsubishi	Push-in spring	MIL	**XG4A-4031**	34	**XW2R-P34G-M1**	98.5	108	③	Page 31
PLC connection	Keyence	Push-in spring	MIL	**XG4A-4031**	34	**XW2R-P34G-M2**	98.5	108	③	Page 31
PLC connection	Keyence	Phillips screws	MIL	**XG4A-3431**	34	**XW2R-J34G-K1**	130.7	140.2	①	Page 35
PLC connection	Keyence	Phillips screws	MIL	**XG4A-4031**	40	**XW2R-J40G-K2**	151.7	161.2	①	Page 35
PLC connection	Keyence	Push-in spring	MIL	**XG4A-3431**	34	**XW2R-P34G-K1**	98.5	108	③	Page 36
PLC connection	Keyence	Push-in spring	MIL	**XG4A-4031**	40	**XW2R-P40G-K2**	113.5	123	③	Page 36
General-purpose	–	Phillips screws	MIL	**XG4A-2031**	20	**XW2R-J20G-T**	81.7	91.2	①	Page 41
General-purpose	–	Phillips screws	MIL	**XG4A-3431**	34	**XW2R-J34G-T**	130.7	140.2	①	Page 41
General-purpose	–	Phillips screws	MIL	**XG4A-4031**	40	**XW2R-J40G-T**	151.7	161.2	①	Page 41
General-purpose	–	Phillips screws	MIL	**XG4A-5031**	50	**XW2R-J50G-T**	186.7	196.2	①	Page 41
General-purpose	–	Phillips screws	MIL	**XG4A-6031**	60	**XW2R-J60G-T**	221.7	231.2	①	Page 41
General-purpose	–	Phillips screws	FCN	**FCN-364P040-AU**	40	**XW2R-J40F-T**	151.7	161.2	①	Page 41
General-purpose	–	Slotted screws	MIL	**XG4A-2031**	20	**XW2R-E20G-T**	64.4	73.9	②	Page 42
General-purpose	–	Slotted screws	MIL	**XG4A-3431**	34	**XW2R-E34G-T**	98.5	108	②	Page 42
General-purpose	–	Slotted screws	MIL	**XG4A-4031**	40	**XW2R-E40G-T**	113.5	123	②	Page 42
General-purpose	–	Slotted screws	MIL	**XG4A-5031**	50	**XW2R-E50G-T**	138.5	148	②	Page 42
General-purpose	–	Slotted screws	MIL	**XG4A-6031**	60	**XW2R-E60G-T**	163.5	173	②	Page 42
General-purpose	–	Slotted screws	FCN	**FCN-364P040-AU**	40	**XW2R-E40F-T**	113.5	123	②	Page 42
General-purpose	–	Push-in spring	MIL	**XG4A-2031**	20	**XW2R-P20G-T**	64.4	73.9	③	Page 43
General-purpose	–	Push-in spring	MIL	**XG4A-3431**	34	**XW2R-P34G-T**	98.5	108	③	Page 43
General-purpose	–	Push-in spring	MIL	**XG4A-4031**	40	**XW2R-P40G-T**	113.5	123	③	Page 43
General-purpose	–	Push-in spring	MIL	**XG4A-5031**	50	**XW2R-P50G-T**	138.5	148	③	Page 43
General-purpose	–	Push-in spring	MIL	**XG4A-6031**	60	**XW2R-P60G-T**	163.5	173	③	Page 43
General-purpose	–	Push-in spring	FCN	**FCN-364P040-AU**	40	**XW2R-P40F-T**	113.5	123	③	Page 43
PLC connection	Mitsubishi	MIL connector relay	MIL	**XG4A-4031**	40	**XW2R-G32G-M1-COM**	108	98.5	⑤	Page 25
General-purpose	–	e-CON	MIL	**XG4A-1431**	14	**XW2R-N08G-COM**	73.9	64.4	⑥	Page 39

All models can be mounted to DIN track. For details, refer to page 9.

Reference Dimensions Diagram Patterns

(Unit: mm)

①

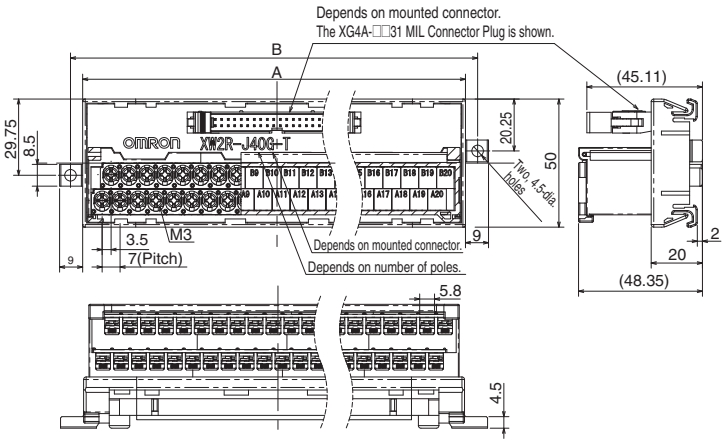

②

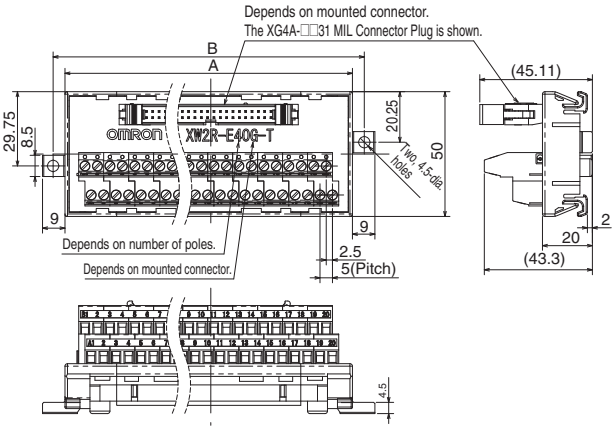

③

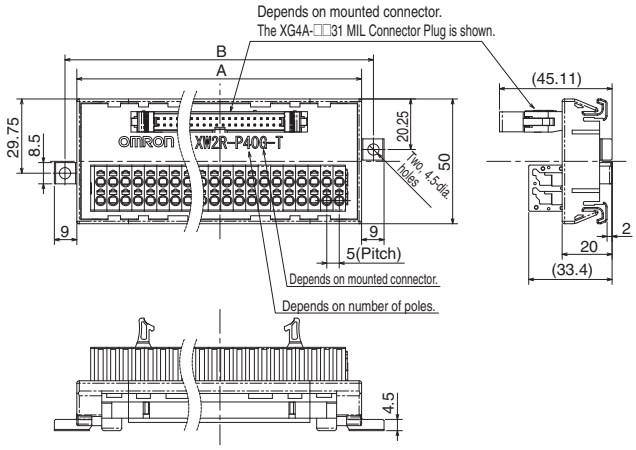

④

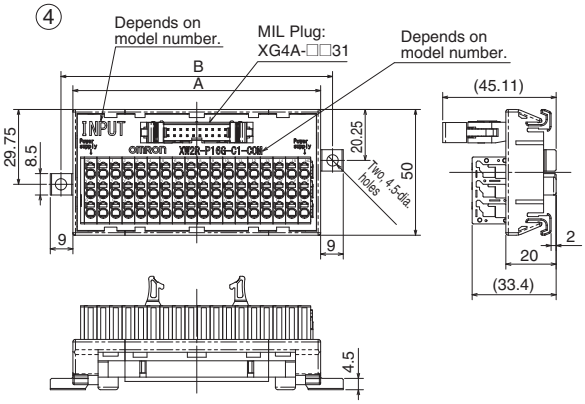

⑤

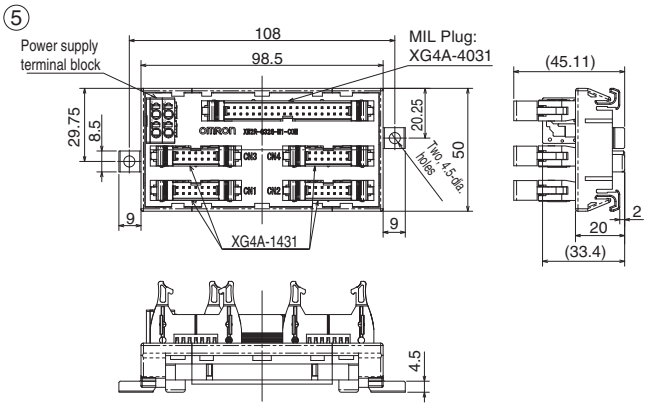

⑥

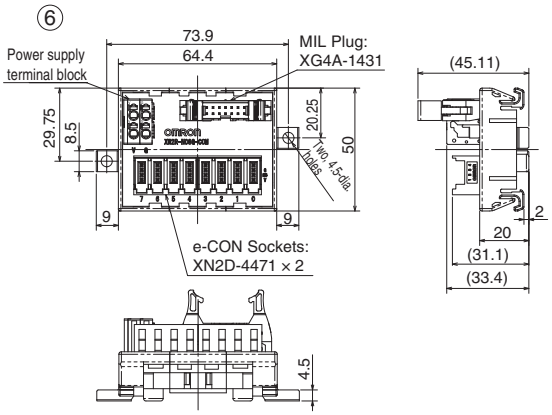

Terms and Conditions Agreement

Read and understand this catalog.

Please read and understand this catalog before purchasing the products. Please consult your OMRON representative if you have any questions or comments.

Warranties.

(a) Exclusive Warranty. Omron's exclusive warranty is that the Products will be free from defects in materials and workmanship for a period of twelve months from the date of sale by Omron (or such other period expressed in writing by Omron). Omron disclaims all other warranties, express or implied.

(b) Limitations. OMRON MAKES NO WARRANTY OR REPRESENTATION, EXPRESS OR IMPLIED, ABOUT NON-INFRINGEMENT, MERCHANTABILITY OR FITNESS FOR A PARTICULAR PURPOSE OF THE PRODUCTS. BUYER ACKNOWLEDGES THAT IT ALONE HAS DETERMINED THAT THE PRODUCTS WILL SUITABLY MEET THE REQUIREMENTS OF THEIR INTENDED USE.

Omron further disclaims all warranties and responsibility of any type for claims or expenses based on infringement by the Products or otherwise of any intellectual property right. (c) Buyer Remedy. Omron's sole obligation hereunder shall be, at Omron's election, to (i) replace (in the form originally shipped with Buyer responsible for labor charges for removal or replacement thereof) the non-complying Product, (ii) repair the non-complying Product, or (iii) repay or credit Buyer an amount equal to the purchase price of the non-complying Product; provided that in no event shall Omron be responsible for warranty, repair, indemnity or any other claims or expenses regarding the Products unless Omron's analysis confirms that the Products were properly handled, stored, installed and maintained and not subject to contamination, abuse, misuse or inappropriate modification. Return of any Products by Buyer must be approved in writing by Omron before shipment. Omron Companies shall not be liable for the suitability or unsuitability or the results from the use of Products in combination with any electrical or electronic components, circuits, system assemblies or any other materials or substances or environments. Any advice, recommendations or information given orally or in writing, are not to be construed as an amendment or addition to the above warranty.

See http://www.omron.com/global/ or contact your Omron representative for published information.

Limitation on Liability; Etc.

OMRON COMPANIES SHALL NOT BE LIABLE FOR SPECIAL, INDIRECT, INCIDENTAL, OR CONSEQUENTIAL DAMAGES, LOSS OF PROFITS OR PRODUCTION OR COMMERCIAL LOSS IN ANY WAY CONNECTED WITH THE PRODUCTS, WHETHER SUCH CLAIM IS BASED IN CONTRACT, WARRANTY, NEGLIGENCE OR STRICT LIABILITY.

Further, in no event shall liability of Omron Companies exceed the individual price of the Product on which liability is asserted.

Suitability of Use.

Omron Companies shall not be responsible for conformity with any standards, codes or regulations which apply to the combination of the Product in the Buyer's application or use of the Product. At Buyer's request, Omron will provide applicable third party certification documents identifying ratings and limitations of use which apply to the Product. This information by itself is not sufficient for a complete determination of the suitability of the Product in combination with the end product, machine, system, or other application or use. Buyer shall be solely responsible for determining appropriateness of the particular Product with respect to Buyer's application, product or system. Buyer shall take application responsibility in all cases.

NEVER USE THE PRODUCT FOR AN APPLICATION INVOLVING SERIOUS RISK TO LIFE OR PROPERTY OR IN LARGE QUANTITIES WITHOUT ENSURING THAT THE SYSTEM AS A WHOLE HAS BEEN DESIGNED TO ADDRESS THE RISKS, AND THAT THE OMRON PRODUCT(S) IS PROPERLY RATED AND INSTALLED FOR THE INTENDED USE WITHIN THE OVERALL EQUIPMENT OR SYSTEM.

Programmable Products.

Omron Companies shall not be responsible for the user's programming of a programmable Product, or any consequence thereof.

Performance Data.

Data presented in Omron Company websites, catalogs and other materials is provided as a guide for the user in determining suitability and does not constitute a warranty. It may represent the result of Omron's test conditions, and the user must correlate it to actual application requirements. Actual performance is subject to the Omron's Warranty and Limitations of Liability.

Change in Specifications.

Product specifications and accessories may be changed at any time based on improvements and other reasons. It is our practice to change part numbers when published ratings or features are changed, or when significant construction changes are made. However, some specifications of the Product may be changed without any notice. When in doubt, special part numbers may be assigned to fix or establish key specifications for your application. Please consult with your Omron's representative at any time to confirm actual specifications of purchased Product.

Errors and Omissions.

Information presented by Omron Companies has been checked and is believed to be accurate; however, no responsibility is assumed for clerical, typographical or proofreading errors or omissions.

OMRON Corporation **Industrial Automation Company**
Tokyo, JAPAN
Contact: www.ia.omron.com

Regional Headquarters
OMRON EUROPE B.V.
Wegalaan 67-69-2132 JD Hoofddorp
The Netherlands
Tel: (31)2356-81-300/Fax: (31)2356-81-388

OMRON ELECTRONICS LLC
2895 Greenspoint Parkway, Suite 200
Hoffman Estates, IL60169 USA
Tel: (1) 847-843-7900/Fax: (1) 847-843-7787

OMRON ASIA PACIFIC PTE. LTD.
No. 438A Alexandra Road # 05-05/08 (Lobby 2),
Alexandra Technopark,
Singapore 119967
Tel: (65) 6835-3011/Fax: (65) 6835-2711

OMRON (CHINA) CO., LTD.
Room 2211, Bank of China Tower,
200 Yin Cheng Zhong Road,
PuDong New Area, Shanghai, 200120, China
Tel: (86) 21-5037-2222/Fax: (86) 21-5037-2200

Authorized Distributor:

CSM_8_3_0416
Cat. No. G077-E1-03 0315 (1012)(W)