Ø22/25 Double/Mushroom-head Push Button Switches

Ø22/25 Double Push Button Switches (S2TR Series)

Type	Appearance	Model	Contact block		LED block	
			A contact	B contact	AC/DC voltage	AC voltage
Extended (illuminated)	S2TR-P3W☐	**S2TR-P3W**ABD(M)	1	1	1	—
		S2TR-P3WABL(M)	1	1	—	1

※The M in the model name indicates modular type contact block. Models without M are singular contact block.
※The control unit, contact blocks, LED blocks are sold separately.
(control unit: bold letters, contact and LED block: regular letters)

• Dimensions

(unit: mm)

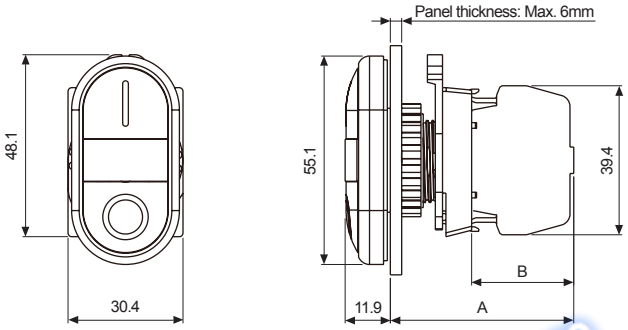

	A	B
Singular type	48.5	27.0
Modular type	46.5	25.0

※For panel cut-out dimensions, please refer to page A-78.

Ø22/25 Mushroom-head Push Button Switches (S2BR Series)

Type	Appearance	Model	Contact block		LED block	
			A contact	B contact	AC/DC voltage	AC voltage
Extended	S2BR-P1G☐ 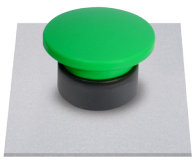	**S2BR-P1**☐A(M)	1	—	—	—
		S2BR-P1☐2A(M)	2	—		
		S2BR-P1☐3A(M)	3	—		
		S2BR-P1☐B(M)	—	1		
		S2BR-P1☐2B(M)	—	2		
		S2BR-P1☐3B(M)	—	3		
		S2BR-P1☐AB(M)	1	1		
		S2BR-P1☐2AB(M)	2	1		
		S2BR-P1☐A2B(M)	1	2		

※☐ indicates color: R, G
※The M in the model name indicates modular type contact block. Models without M are singular contact block.
※The control unit, contact blocks, LED blocks are sold separately.
(control unit: bold letters, contact block: regular letters)

• Dimensions

(unit: mm)

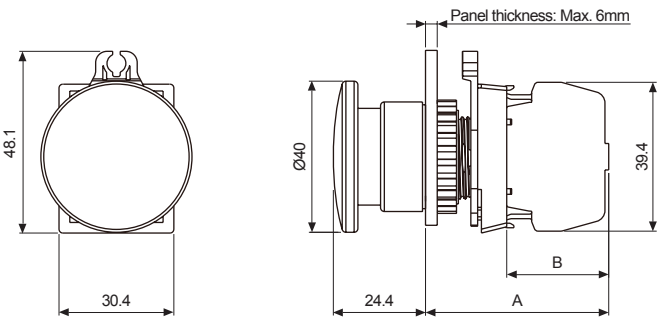

	A	B
Singular type	48.5	27.0
Modular type	46.5	25.0

※For panel cut-out dimensions, please refer to page A-78.

https://hoplongtech.com HOTLINE: 1900.6536

Smartec
www.smartec-automacao.com.br