e-Front runners

FUJI Command Switches Integrated contact structure

AR16, AF16 series

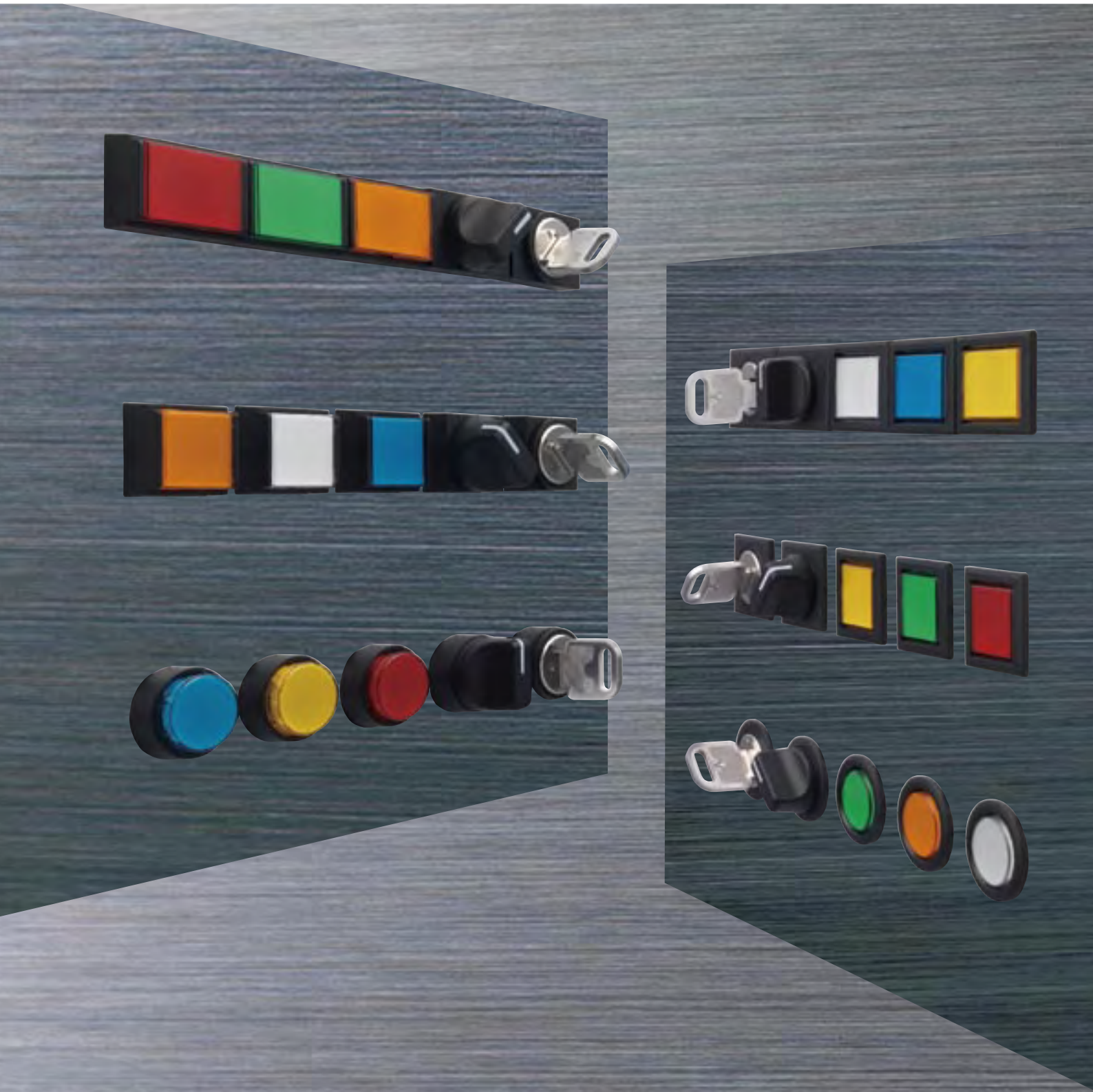

Fuji Electric FA Components & Systems Co., Ltd.

AEH315

CONTENTS

Product Index

Command Switches AR16•DR16, AF16•DF16

φ 16

minico

- **An integrated structure with built-in contacts that can reduce control panel depth.**
- **A wide variety of sockets are available to simplify wiring.**

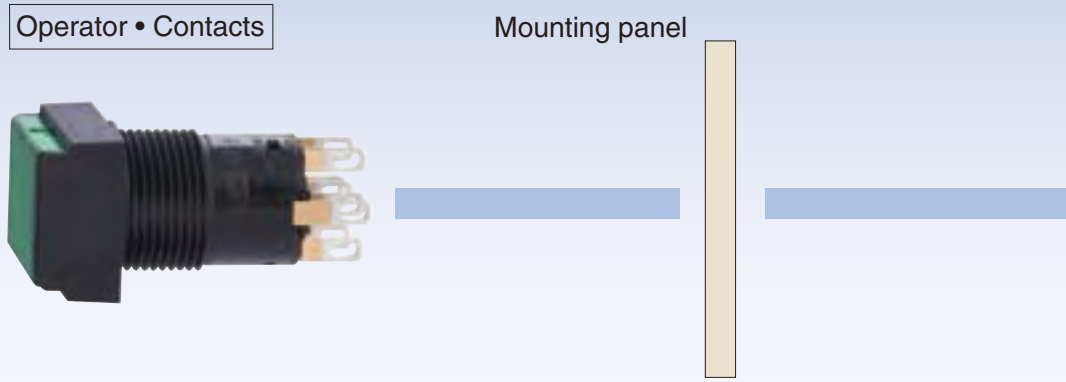

Supporting smaller and thinner operator's panels

A structure that integrates operator and contacts to reduce panel-mounting depth. Terminals extending to the rear of the switch ensure easy wiring work.

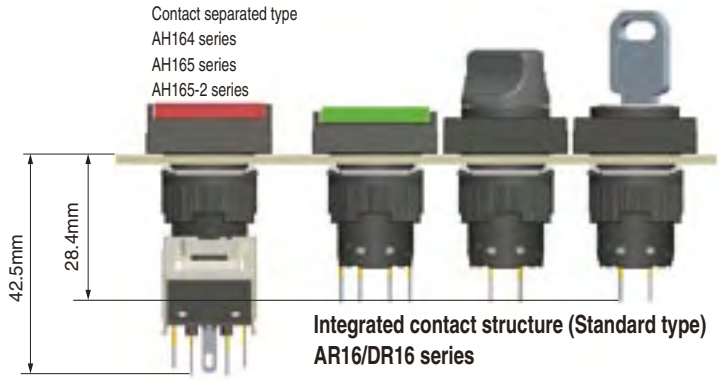

A wide variety of sockets reduce wiring work

Switches combine with a variety of sockets to simplify wiring.

- Fast-connection socket

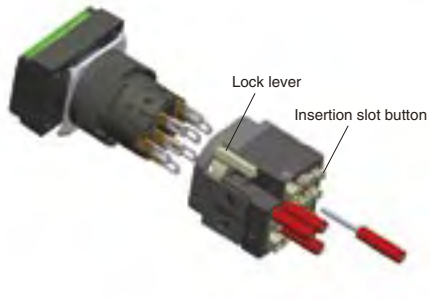

•Applicable as a fast-connection terminal switch by combining the socket with a switch.
•Easily wired by simply removing the wire sheath and inserting the wires while pressing the insertion slot button (no soldering required).
•Incorporates a branch terminal for easy branching.

- Connector socket

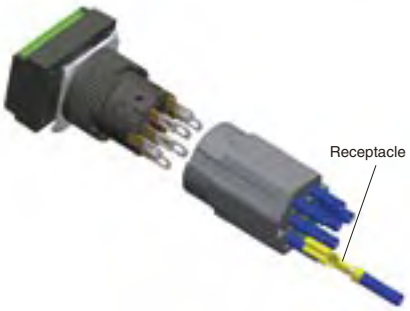

•Applicable as a connector by combining the socket with receptacles.
•The socket holds the receptacles, making it easy to connect the receptacle to the switch with a single operation.

- Socket for PC board

•Applicable as a switch for PC board by combining the socket with a switch.
•Pattern wiring reduces the number of wiring man-hour and helps prevent faulty wiring.

minico is a nickname for the AR16/AF16 series of integrated command switches with built-in contacts.

AR16 • DR16
AF16 • DF16

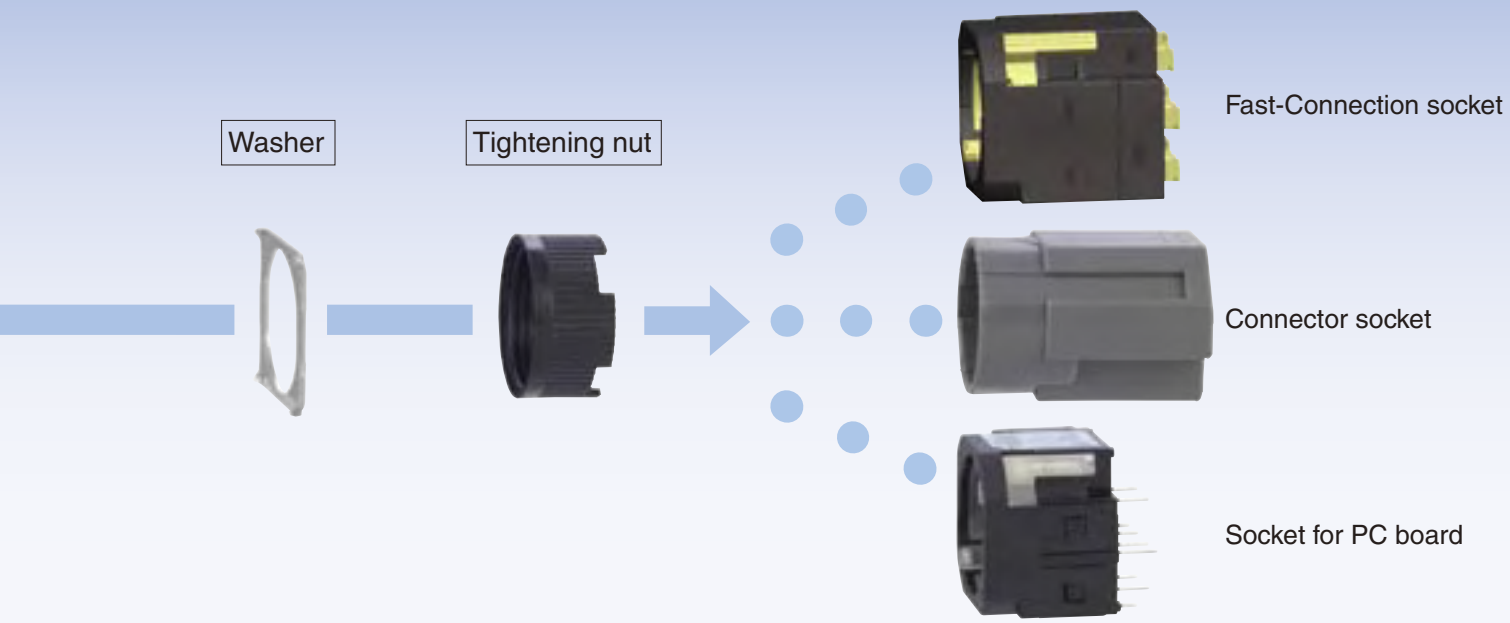

Contributes to attractive panel designs

In addition to the standard type, a thin type with a panel protrusion of only 2 mm is available, allowing high-density mounting for attractive panel designs.

Integrated contact structure (Thin type)
AF16/DF16 series

•Keep in mind that the panel cutout size for the thin type depends on the operator shape. See page 44 for details.
•The panel depth is unified to 35.9mm.

Brighter illuminated surface

Less power consumption helps to save energy.

A longer service life helps to reduce maintenance costs.

Dedicated LED lamp

Degree of protection IP65

The operator has IP65 protection for smooth operation without adverse effects from oil, water, or dusts. Applicable to a wide variety of equipment, from machine tools to OA equipment.

Meets EU RoHS requirements

Standard models meet RoHS requirements (EU Directive 2002/95/C).

Highly reliable contact mechanism

Gold-plated contacts and a snap-action mechanism enables IC-level applications (with a switching current of 1 mA at 5 V).

Standard models meet international standards

Standard models meet UL/CSA requirements, China Compulsory Certification (CCC) standards, and TÜV EN standards, making them ideal for equipment for export.

Note: Command switches shipped as single articles to China must conform to the Product Quality Law. Check with your Fuji Electric representative.

The insertion/extraction life of the key is greatly extended

The key selector switch incorporates a pin tumbler type key (reversible type) to improve the insertion/extraction performance of the key.

•Six key types are available.
•The pin tumbler construction improves security.

The operating angle position of the selector switch can be easily changed.

The bezel is separate from the knob (key), so the operating angle position can be easily changed in 45° increments (with the AR16 series rectangular or square type only).

The following figure shows a knob type example. Same applies to the key type.

•Two-position model example (See page 47 for details.)

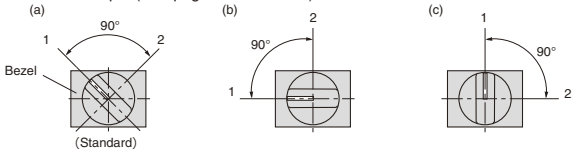

Safety precautions

- This catalog aims at offering reference information on selecting and purchasing Fuji Electric FA' s electrical devices and components.
- Prior to installation, wiring, operation, maintenance and inspection of the product, read through the Instruction Manuals and/or User's Manuals to ensure proper use of the product. Improper use may result in death or serious injury.
- If you have any question or require further detailed information on this catalog, consult with your local dealership or Fuji Electric FA.
- Observe the following precautions for safe operation of the products contained in the catalog.

⚠ WARNING

Power supply must be turned OFF before installation, de-installation, wiring, maintenance and inspection.
Never touch any live parts such as terminals while the power is turned ON.
Electrical shock or short-circuit may result in burn, death, or serious injury.

⚠ CAUTION

- Do not transport the products in the method other than those specified. Do not use the products if any damage or deformation is discovered when unpacked. Fire, malfunction or failure may result.
- Do not give the products a shock by falling or toppling during transportation or unpacking. Damage or failure may result.
- Installation, electrical work, electrical wiring, maintenance and inspection should be conducted by qualified personnel with professional knowledge.
- Operate (Store) in the environment specified in the Instruction Manuals and/or User's Manuals. Do not install the products in the abnormal environment such as high temperature, high humidity, dew condensation, dust, corrosive gases, organic solvents, special oil, excessive vibration or shock. Fire, malfunction, electrical shock, or failure may result.
- Use the products at the rated voltage and current specified in the Operating Instructions and/or User's Manuals. Using beyond the rated values may result in grounding, short-circuit, fire, explosion, failure, or malfunction.
- Install the products according to the directions described in the Operaitng Instructions and/or User' s Manuals. Improper mounting may cause falling, malfunction, or failure, and result in injury.
- Select wire sizes suitable for the applied voltage and thermal current. Tighten with the torque specified in the Operating Instructions. Improper wiring may result in fire.
- Special care should be taken to prevent entry of foreign objects such as dust, concrete chips, iron powder, wire chips, etc. Poor contacts, defective release action, fire, or malfunction may result.
- Periodically make sure the terminal screws and mounting screws are securely tightened. Operation at a loosened status might cause fire or malfunction.
- Attaching the live part protective covers is recommended. Otherwise, it may result in an electric shock to the operator.
- Be sure to install the electrical wiring correctly and securely, observing the operating instructions and manual. Wrong or loose wiring might cause fire, accidents, or failure. Never conduct any repair on-site. Please ask your Fuji Electric FA representative for repair. Fire, accidents, or failure may result.
- Before cleaning, first turn the power OFF, use towels twisted to be dry after soaked with warm water. Use of diluents or other organic solvents may dissolve or discolor the product surface.
- Do not remodel or disassemble the products. Failure may result.
- The products should be treated as industrial wastes when they are to be discarded.
- The products contained in this catalog have been designed and manufactured as general-purpose products for general industry. Customers, who intend to use the products for such equipment or systems that may affect human lives, are requested to prepare safety measures together with other safety devices.
- Customers, who intend to use the products described in this catalog, for special applications such as for nuclear energy control, aerospace, medical, or transportation, please consult your Fuji Electric FA agent.
- Customers, who intend to use the products for such applications or systems that may lead to loss of human lives or serious damage to facility in the event of the products' failure, are requested to provide safety measures by all means.
- The information contained in this catalog is subject to change without prior notice.

Glossary

Classification	Term	Explanation
Rating	Rated insulation voltage (Ui)	A voltage value that serves as a reference when designing a device and satisfies the clearance and creepage distance and the withstand voltage (dielectric strength) of the device.
	Rated operational voltage (Ue)	A voltage value applied to a device under specified conditions.If the device is a control switch, the rated operational voltage (Ue) in combination with the rated operational current determines the equipment that it is to be applied to. Furthermore, the rated operational voltage (Ue) determines the relevant tests and operating load type of the control switch.If the control switch is an illuminated type, the term "lamp operational voltage" is applied in this catalog in order to distinguish it from the rated operational voltage of the switch.
	Rated impulse withstand voltage (Uimp)	This is the peak value of an impulse voltage that has a specified waveform and polarity and that is capable of being withstood by a device under specified test conditions, and serves as a reference for clearance.
	Conventional free air thermal current (Ith)	The maximum value for an electric current used to test the temperature rise of a control switch.
	Rated operational current (Ie)	An electric current applied under specified conditions.
Operating environment	Pollution degree	A factor used for determining the clearance and creepage distance of a device. There are four pollution degrees according to the pollutants in the operating environment, such as the dust in the air. Fuji's Command Switches are applicable to pollution degree 3. Pollution degree 3 refers to the occurrence of conductive pollution or the occurrence of conductivity as a result of condensation, but the occurrence of dry, nonconductive pollution in normal, dry conditions. It applies to environments typical of manufacturing plants.
Degree of protection	IP code	The IP code stipulates the degree of protection of a device provided by its enclosure against the ingress of solid matter and water according to IEC 60529. The IP code is expressed with the code letters IP (Ingress Protection) followed by two digits. The first characteristic digit indicates the degree of protection against the ingress of solid foreign objects. The second characteristic digit indicates the degree of protection against the ingress of water.
Types of pilot lights and illuminated switches	Pilot lights without transformer Illuminated switch without transformer	A pilot light or illuminated switch designed so that the voltage of the electric circuit can be applied directly to the light source. Ex. Pilot light Illuminated switch 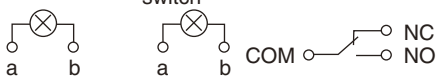 Note: The terms of a, b, COM, NC and NO indicate the terminal numbers
Operational functions	Momentary	The contacts operate when the pushbutton is pressed and automatically reset when the pushbutton is released.
	Alternate	The contacts operate when the pushbutton is pressed and the actuated state is held (locked) when the pushbutton is released. The contacts are reset when the pushbutton is pressed again.
	Maintained	The knob (key) of selector switch is operated and reset by hand. The contacts are interlocked according to each knob (key) operation.
	Spring return	The knob (key) of the selector switch and the contacts are automatically reset to the normal position if the knob (key) is released while the knob (key) is being actuated.
	Spring/manual return	Manual and automatic knob (key) resetting methods combined and applied to three-notch selector switches.
Others	High-brightness LED lamp	An LED lamp incorporates a four-element LED chip with high luminous efficiency or a high-performance gallium nitride LED chip, providing clear coloring and greatly increased brightness.

■ Illuminated pushbutton switches

Operator		Flush rectangular		Flush rectangular with guard		Flush square		Extended round		Flush round	
Operator action		Momentary	Alternate	Momentary	Alternate	Momentary	Alternate	Momentary	Alternate	Momentary	Alternate
Standard type	Type	**AR16F0N**	**AR16F5N**	**AR16G0N**	**AR16G5N**	**AR16F0M**	**AR16F5M**	**AR16E0L**	**AR16E5L**	–	–
	Appearance									–	
	Bezel (mm)	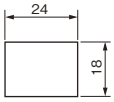		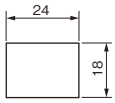		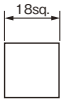		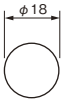		–	
	Panel cutting (mm)	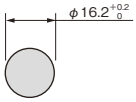									
Thin type	Type	**AF16F0N**	**AF16F5N**	–	–	**AF16F0M**	**AF16F5M**	–		**AF16F0L**	**AF16F5L**
	Appearance			–				–			
	Bezel (mm)	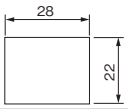		–		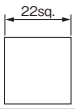		–		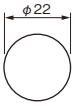	
	Panel cutting (mm)	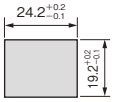		–		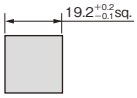		–		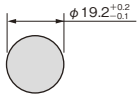	
Legend plate (mm)		19.6×13.6		19.6×13.6		13.6sq.		ϕ13.6		ϕ13.6	
Bezel color		Black									
Button color (transparent)		Green, Red, White [*1], Yellow, Orange, Blue									
LED lamp	Color	Green, Red, Orange, Yellow, Amber, Blue									
	Lamp voltage	6V AC/DC, 12V AC/DC, 24V AC/DC									
Contact arrangement		SPDT, 2PDT									
Contact rating		120V AC 1A (AC-13), 24V DC 0.7A (DC-13, $T_{0.95}$ = 21ms) 240V AC 0.7A (AC-13), 125V DC 0.15A (DC-13, $T_{0.95}$ = 21ms)									
Mechanical durability		Momentary action: 1 million operations Alternate action: 250,000 operations									
Electrical durability		100,000 operations (220V AC 0.7A)									
Degree of protection (Operator)		IP65									
Type of terminal		Tab (#110) / solder dual-use terminal									
Accessories	Protective cover [*2]	○ [*3]		–		○ [*3]		○		–	
	Dust-proof cover	○ [*4]		–		○ [*4]		○		–	
	Terminal cover	○		○		○		○		○	
	Socket: Quick connection	○		○		○		○		○	
	Socket: Connector use	○		○		○		○		○	
	Socket: PC board use	○		○		○		○		○	
	Panel plug	○		○		○		○		○	

Notes: [*1] A combination of the translucent button and the white legend plate comes to white.
[*2] The protective cover and button of the thin type are made of an integral structure.
[*3] The protective cover of the thin type is available for momentary action only.
[*4] Available for standard type only.

■ Pushbutton switches

Operator		Flush rectangular		Flush rectangular with guard		Flush square		Extended round		Flush round	
Operator action		Momentary	Alternate	Momentary	Alternate	Momentary	Alternate	Momentary	Alternate	Momentary	Alternate
Standard type	Type	**AR16F0T**	**AR16F5T**	**AR16G0T**	**AR16G5T**	**AR16F0S**	**AR16F5S**	**AR16E0R**	**AR16E5R**	–	–
	Appearance									–	
	Bezel (mm)	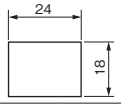		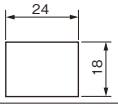		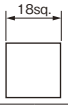		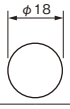		–	
	Panel cutting (mm)	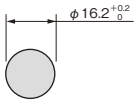									
Thin type	Type	**AF16F0T**	**AF16F5T**	–	–	**AF16F0S**	**AF16F5S**	–		**AF16F0R**	**AF16F5R**
	Appearance			–				–			
	Bezel (mm)	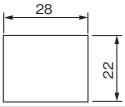		–		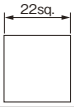		–		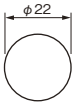	
	Panel cutting (mm)	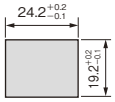		–		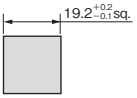		–		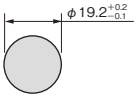	
Legend plate (mm)		19.6×13.6		19.6×13.6		13.6sq		ϕ13.6		ϕ13.6	
Button color (transparent)		Black									
Button color		Green, Red, Black [*1], White [*2], Yellow, Orange, Blue									
Contact arrangement		SPDT, 2PDT									
Contact rating		120V AC 1A (AC-13), 24V DC 0.7A (DC-13, $T_{0.95}$ = 21ms) 240V AC 0.7A (AC-13), 125V DC 0.15A (DC-13, $T_{0.95}$ = 21ms)									
Mechanical durability		Momentary action: 1 million operations Alternate action: 250,000 operations									
Electrical durability		100,000 operations (220V AC 0.7A)									
Degree of protection (Operator)		IP65									
Type of terminal		Tab (#110) / solder dual-use terminal									
Accessories	Protective cover [*3]	○ [*4]		–		○ [*4]		○		–	
	Dust-proof cover	○ [*5]		–		○ [*5]		○		–	
	Terminal cover	○		○		○		○		○	
	Socket: Quick connection	○		○		○		○		○	
	Socket: Connector use	○		○		○		○		○	
	Socket: PC board use	○		○		○		○		○	
	Panel plug	○		○		○		○		○	

Notes: [*1] A combination of the translucent button and the black legend plate comes to black button.
[*2] A combination of the translucent button and the white legend plate comes to white button.
[*3] The protective cover and button of the thin type are made of an integral structure.
[*4] The protective cover of the thin type is available for momentary action only.
[*5] Available for standard type only.

■ Pilot lights

Lens shape			Flush rectangular	Flush square	Extended round	Flush round	Dome
Standard type	Type		**DR16F0N**	**DR16F0M**	**DR16E0L**	–	**DR16D0L**
	Appearance					–	
	Bezel (mm)		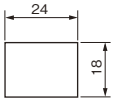	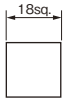	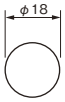	–	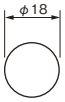
	Panel cutting (mm)		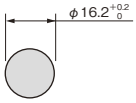				
Thin type	Type		**DF16F0N**	**DF16F0M**	–	**DF16F0L**	–
	Appearance				–		–
	Bezel (mm)		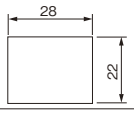	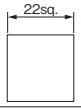	–	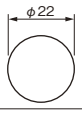	–
	Panel cutting (mm)		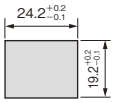	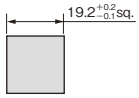	–	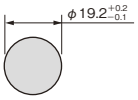	–
Legend plate (mm)			19.6×13.6	13.6sq	ϕ13.6	ϕ13.6	–
Bezel color			Black				
Button color (transparent)			Green, Red, White [*1], Yellow, Orange, Blue				
LED lamp	Color		Green, Red, Orange, Yellow, Amber, Blue				
	Lamp voltage		6V AC/DC, 12V AC/DC, 24V AC/DC				
Degree of protection (Lens)			IP65				
Type of terminal			Tab (#110) / solder dual-use terminal				
Accessories	Terminal cover		○	○	○	○	○
	Socket	Quick connection	○	○	○	○	○
		Connector use	○	○	○	○	○
		PC board use	○	○	○	○	○
	Panel plug		○	○	○	○	○

Note: [*1] A combination of the translucent lens and the white legend plate comes to white lens (except for dome type).

■ Selector switches (Knob type)

Operator			Knob with rectangular bezel	Knob with square bezel	Knob with round bezel
No. of position			2-position, 3-position	2-position, 3-position	2-position, 3-position
Operator action			Maintained, Spring/manual return, Spring return	Maintained, Spring/manual return, Spring return	Maintained, Spring/manual return, Spring return
Standard type	Type		**AR16PT**	**AR16PS**	**AR16PR**
	Appearance				
	Bezel (mm)		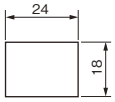	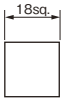	
	Panel cutting (mm)		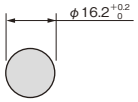		
Thin type	Type		**AF16PT**	**AF16PS**	**AF16PR**
	Appearance				
	Bezel (mm)		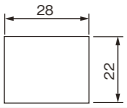	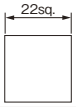	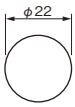
	Panel cutting (mm)		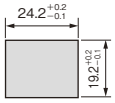	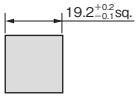	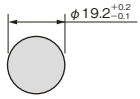
Bezel color			Black		
Color of knob			Black		
Contact arrangement			SPDT, 2PDT		
Contact rating			120V AC 1A (AC-13), 24V DC 0.7A (DC-13, $T_{0.95}$ = 21ms) 240V AC 0.7A (AC-13), 125V DC 0.15A (DC-13, $T_{0.95}$ = 21ms)		
Mechanical durability			250,000 operations		
Electrical durability			100,000 operations (220V AC 0.7A)		
Degree of protection (Operator)			IP65		
Type of terminal			Tab (#110) / solder dual-use terminal		
Accessories	Terminal cover		○	○	○
	Socket	Quick connection	○	○	○
		Connector use	○	○	○
		PC board use	○	○	○
	Panel plug		○	○	○

■ Selector switches (Key type)

Operator			Key with rectangular bezel	Key with square bezel	Key with round bezel
No. of position			2-position, 3-position	2-position, 3-position	2-position, 3-position
Operator action			Maintained, Spring/manual return, Spring return	Maintained, Spring/manual return, Spring return	Maintained, Spring/manual return, Spring return
Standard type	Type		**AR16JT**	**AR16JS**	**AR16JR**
	Appearance				
	Bezel (mm)		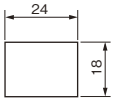	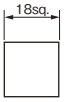	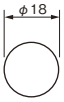
	Panel cutting (mm)		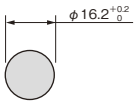		
Thin type	Type		**AF16JT**	**AF16JS**	**AF16JR**
	Appearance				
	Bezel (mm)		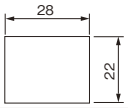	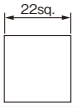	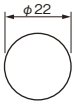
	Panel cutting (mm)		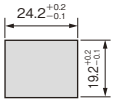	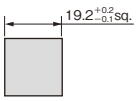	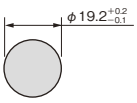
Bezel color			Black		
Key removable position			Left (A), Left/Right (B), Left/Center/Right (C), Right (D), Center (E), Center/Right (F), Left/Center (G)		
No. of key types			6 (A, B, C, D, E, F)		
Contact arrangement			SPDT, 2PDT		
Contact rating			120V AC 1A (AC-13), 24V DC 0.7A (DC-13, $T_{0.95}$ = 21ms) 240V AC 0.7A (AC-13), 125V DC 0.15A (DC-13, $T_{0.95}$ = 21ms)		
Mechanical durability			250,000 operations		
Electrical durability			100,000 operations (220V AC 0.7A)		
Degree of protection (Operator)			IP65		
Type of terminal			Tab (#110) / solder dual-use terminal		
Accessories	Terminal cover		○	○	○
	Socket	Quick connection	○	○	○
		Connector use	○	○	○
		PC board use	○	○	○
	Panel plug		○	○	○

■ Features

- An integrated operator component and contact mechanism that reduces control panels' depth. A unified depth of 28.4mm for the Standard type and 35.9mm for the Thin type.
- Thin type and Standard types available for your control panel design. Select an optimum one to match your control panel design.
- A wide variety of sockets help to reduce wiring.
- Incorporating a gold-flashed SPDT or 2PDT contact mechanism with a snap-action structure that makes and breaks 1mA at 5V.
- A key selector switch with a pin tumbler key and reversible-type mechanism provides improved key insertion and removal (extraction) performance.
- Complies with RoHS (EU Directive 2002/95/EC).
- The standard AR16 and DR16, AF16 and DF16 series of the ϕ16 Command Switches are approved by UL/CSA, CCC and TÜV (EN standard).
- Bearing CE markings.

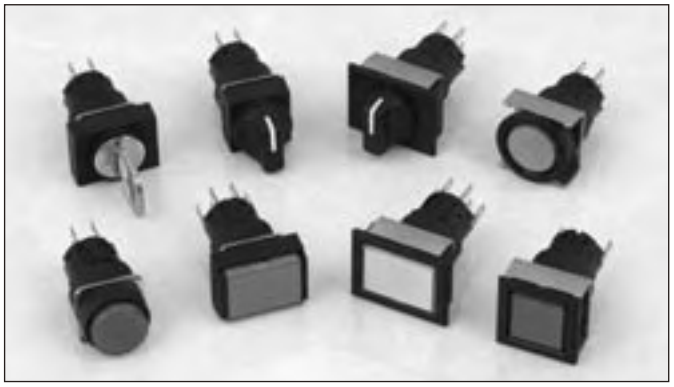

■ Contact ratings

• UL/CSA

• AC (COS ϕ = 0.35)

Contact rating code	120V		240V	
	Making current	Breaking current	Making current	Breaking current
D300	3.6A	0.6A	1.8A	0.3A

• TÜV (EN60947-5-1), CCC (GB14048-5), JIS C 8201-5-1

Type of switches	Conventional free air thermal current Ith	Rated operational current Ie				
		Rated operational voltage Ue	AC		DC	
			AC-13 (Inductive load)	AC-12 (Resistive load)	DC-13 (Inductive load)	DC-12 (Resistive load)
Illuminated pushbutton switch Pushbutton switch Selector switch	5A	24V	–	–	0.7A *1	1A
		120V	1A	1.5A	–	–
		125V	–	–	0.15A *1	0.2A
		240V	0.7A	1A	–	–

Note: *1 $T_{0.95}$=21ms

■ Specifications (indoor use)

Item		• Illuminated pushbutton switch, pushbutton switch	• Selector switch	• Pilot lights
Rated insulation voltage Ui		250V AC/DC		
Durability	Mechanical	Momentary action: 1 million operations Alternate action: 250,000 operations	Maintained: 250,000 operations Spring/manual return: 250,000 operations Spring return: 250,000 operations	–
	Electrical	100,000 operations (at 220V AC 0.7A)		–
Operating frequency		1200 operations/hour (On-load factor: 40%)		–
Withstand voltage	Between live section and grounding	2000V AC, 1 minute		
	Between opposite polarity live sections	2000V AC, 1 minute		–
Insulation resistance		100MΩ or more (500V DC megger)		
Rated impulse withstand voltage Uimp		2.5kV		
Conditional short-circuit current		1000A		
Short-circuit protective device		gG 2A (IEC60269 Fuse)		
Pollution degree		3		
Vibration		Resonance: frequency 10 to 55Hz, double amplitude 0.1mm Constant: frequency 16.7Hz, double amplitude 3mm		
Shock		Malfunction durability; 100m/s^2 Mechanical durability; 500m/s^2		
Operational ambient temperature		–10 to +55°C (no icing or no condensation)		
Storage temperature		–40 to +70°C		
Relative humidity (inside control panel)		45 to 85%RH (–5 to + 40°C) (no icing or no condensation)		
Degree of protection of operating (displaying) section		IP65 (dust-proof, water je t proof): IEC 60529		

■ Degree of protection

• The table below shows the degree of protection stipulated by IEC (International Electrotechnical Commission) standard (IEC 60529).

IP– 6 5

Class	Degree of protection against human contact or penetration by a foreign object		Degree of protection against ingress of water	
5		• Normal operation secured even if the dust that can pass through screen of 75μm mesh invades.	Protection against water jets 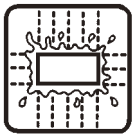	• Protected against water jet from all directions. • Water projected by nozzle (6.3mm-inner dia.) from all directions at 29.4kPa for 3min at a distance of 3m.
6		• The dust which can pass through screen of 75μm mesh shall not invade.	Protection against powerful water 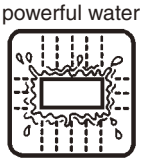	• Protected against powerful water jet from all directions. • Water projected by nozzle (12.5mm-inner dia.) from all directions at 98kPa for 3min at a distance of 3m.

■ Contact reliability

FUJI has confirmed that the product can be used in 1mA circuit conditions at 5V AC or DC. The operable range, however, may vary depending on the operational ambient conditions and type of load.

■ Lamp ratings and current consumption

• Illuminated pushbutton switch, Pilot lights

Applied method	Lamp operational voltage	High-brightness LED lamp		
		Type	Lamp rated voltage	Current consumption
without transformer	6V AC/DC	**DR6L695-A□**	6V AC/DC	Green, Red, Amber, Blue: 7.5mA AC, 7.5mA DC Orange: 8.5mA AC, 8.5mA DC Yellow: 17mA AC, 17mA DC
	12V AC/DC	**DR6L695-B□**	12V AC/DC	Green, Red, Amber, Blue: 7.5mA AC, 7.5mA DC Orange, Yellow: 8.5mA AC, 8.5mA DC
	24V AC/DC	**DR6L695-E□**	24V AC/DC	Green, Red, Amber, Blue: 7.5mA AC, 7.5mA DC Orange, Yellow: 8.5mA AC, 8.5mA DC

Note: A box □ indicates the luminous color. For details, see the “Combination of Illuminated pushbutton / pilot light color and LED lamp luminous color”.

■ Combination of Illuminated pushbutton / pilot light color and LED lamp luminous color

Illuminated pushbutton / pilot light color (lens color)		Luminous color of high-brightness LED lamp	
	Type		Type
Green	G	Green	**DR6L695-■G**
Red	R	Red	**DR6L695-■R**
White	W	Orange	**DR6L695-■W**
Yellow	Y	Yellow	**DR6L695-■Y**
Orange	A	Amber	**DR6L695-■A**
Blue	S	Blue	**DR6L695-■S**

Note: [*1] A box ■ indicates the lamp operational voltage. For details, see the “Lamp ratings and current consumption”.

■ LED durability

Type of lamp	Durability	Judgment criterion
LED lamp	Approx. 30000h	When the brightness is less than 50% of initial value.

• Estimated durability for LED lamps

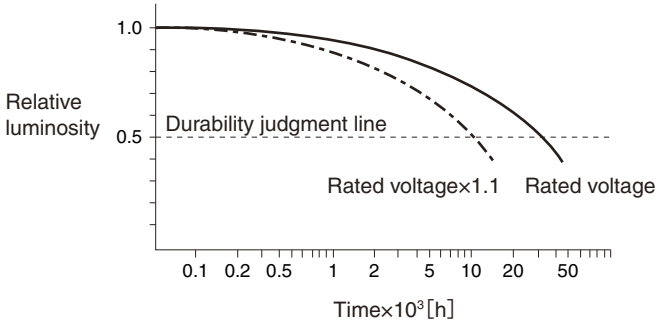

Note 1. Durability at Ta=25°C
Note 2. Durability is affected by temperature, humidity, and voltage fluctuation.

■ Standard models approved by international standards

The standard models of AR16 and DR16, AF16 and DF16 series of the ϕ16 Command Switches meet UL / CSA requirements, China Compulsory Certification (CCC) standards, and TÜV EN standards, thus ensuring easier direct or indirect export to North America and European countries with no safety standard concerns.

AR16 and DR16, AR16 and DR16
Type number nomenclature

• Illuminated pushbutton switches

AR16 F0N – C2 E3 G

Product category

Category	Code
Standard type	**AR16**
Thin type	**AF16**

Operator shape and action

Operator shape	Code			
	Standard type		Thin type	
	Momentary	Alternate	Momentary	Alternate
Flush rectangular	**F0N**	**F5N**	**F0N**	**F5N**
Flush rectangular with guard	**G0N**	**G5N**	**–**	**–**
Flush square	**F0M**	**F5M**	**F0M**	**F5M**
Extended round	**E0L**	**E5L**	**–**	**–**
Flush round	**–**	**–**	**F0L**	**F5L**

Contact arrangement and terminal

Contact arrangement	Code	Type of terminal
SPDT	**C1**	Tab (#110) and solder dual-use terminal
2PDT	**C2**	

Color of button

Color	LED color	Code
Green	Green	**G**
Red	Red	**R**
White *1	Orange	**W**
Yellow	Yellow	**Y**
Orange	Amber	**A**
Blue	Blue	**S**

Note: • The button is transparent in color.
*1: A combination of the transparent lens and the white legend plate comes to white.

Lamp operational voltage and light source

Applied method	Voltage	Code
		LED
Without transformer	6V AC/DC	**A3**
	12V AC/DC	**B3**
	24V AC/DC	**E3**

• Pushbutton switches

AR16 F0T – C2 R

Product category

Category	Code
Standard type	**AR16**
Thin type	**AF16**

Operator shape and action

Operator shape	Code			
	Standard type		Thin type	
	Momentary	Alternate	Momentary	Alternate
Flush rectangular	**F0T**	**F5T**	**F0T**	**F5T**
Flush rectangular with guard	**G0T**	**G5T**	**–**	**–**
Flush square	**F0S**	**F5S**	**F0S**	**F5S**
Extended round	**E0R**	**E5R**	**–**	**–**
Flush round	**–**	**–**	**F0R**	**F5R**

Contact arrangement and terminal

Contact arrangement	Code	Type of terminal
SPDT	**C1**	Tab (#110) and solder dual-use terminal
2PDT	**C2**	

Color of button

Color	Code
Green	**G**
Red	**R**
Black *1	**B**
White *2	**W**
Yellow	**Y**
Orange	**A**
Blue	**S**

Notes: • The button is transparent in color.
*1: A combination of the transparent button and the black legend plate comes to black.
*2: A combination of the transparent button and the white legend plate comes to white.

Note: The manufacturing range varies depending on the model. For details, see “Types and dimensions” of this catalog.

• Pilot lights

DR16 D0L – E3 W

Product category

Category	Code
Standard type	**DR16**
Thin type	**DF16**

Lens shape

Lens shape	Code	
	Standard type	Thin type
Flush rectangular	**F0N**	**F0N**
Flush square	**F0M**	**F0M**
Extended round	**E0L**	**–**
Flush round	**–**	**F0L**
Dome	**D0L**	**–**

Color of lens

Color	LED color	Code
Green	Green	**G**
Red	Red	**R**
White *1	Orange	**W**
Yellow	Yellow	**Y**
Orange	Amber	**A**
Blue	Blue	**S**

Note: ・The lens is transparent in color.
*1 : A combination of the transparent lens and the white legend plate comes to white (except for dome type).

Lamp operational voltage and light source

Applied method	Voltage	Code
		LED
Without transformer	6V AC/DC	**A3**
	12V AC/DC	**B3**
	24V AC/DC	**E3**

Note: The terminal used is a tab (#110) and solder dual-use terminal.

Note: The manufacturing range varies depending on the model. For details, see “Types and dimensions” of this catalog.

AR16 and DR16, AR16 and DR16
Type number nomenclature

• Selector switches (Knob type)

AR16 PT−2 C1 B

Product category

Category	Code
Standard type	**AR16**
Thin type	**AF16**

Operator shape

Operator shape	Code
Knob with rectangular bezel	**PT**
Knob with square bezel	**PS**
Knob with round bezel	**PR**

Color of knob

Color	Code
Black	**B**

Contact arrangement and terminal

Contact arrangement	Code	Type of terminal
SPDT *1	**C1**	Tab (#110) and solder dual-use terminal
2PDT	**C2**	

Note: *1 2-position model only available

No. of positions and operator action

No. of positions	Operator action	Code
2-position (90°)	Maintained	**2**
	Spring return (Right to left)	**0**
3-position (45°)	Maintained	**3**
	Spring/manual return (Left to center)	**6**
	Spring/manual return (Right to center)	**7**
	Spring return (Left or right to center)	**1**

• Key position and contact operation

2-position

Operator action (View form the front)		Contact arrangement	Contact unit			Operator position *2	
2	0					1	2
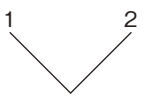 Maintained/90°	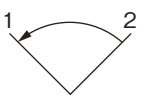 Spring return/90°	SPDT	Left	COM	NC	●	
					NO		●
		2PDT	Left	COM	NC	●	
					NO		●
			Right	COM	NC	●	
					NO		●

Terminal arrangement
View from the terminal side (the back)

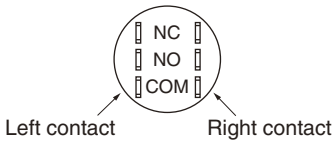

3-position

Operator action (View form the front)				Contact arrangement	Contact unit			Operator position *2		
3	6	7	1					1	2	3
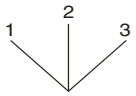 Maintained/each 45°	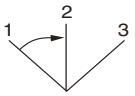 Spring/manual return/each 45°	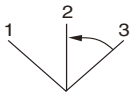 Spring/manual return/each 45°	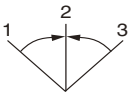 Spring return/each 45°	2PDT	Left	COM	NC	▬	▬	
							NO			●
					Right	COM	NC		▬	▬
							NO	●		

Note: *2 ●, ▬: means the contact closed (ON).

Note: The manufacturing range varies depending on the model. For details, see “Types and dimensions” of this catalog.

• Selector switches (Key type)

AR16 JT−3 E C2 A

Product category

Category	Code
Standard type	**AR16**
Thin type	**AF16**

Operator shape

Operator shape	Code
Key with rectangular bezel	**JT**
Key with square bezel	**JS**
Key with round bezel	**JR**

No. of positions and operator action

No. of positions	Operator action	Code
2-position (90°)	Maintained	**2**
	Spring return (Right to left)	**0**
3-position (45°)	Maintained	**3**
	Spring/manual return (Left to center)	**6**
	Spring/manual return (Right to center)	**7**
	Spring return (Left or right to center)	**1**

Key removable position

Key removable position	Applicable operator action						Code
	2	0	3	6	7	1	
Left	○	○	○	–	○	–	**A**
Left and right	○	–	○	–	–	–	**B**
Left, center and right	–	–	○	–	–	–	**C**
Right	○	–	○	○	–	–	**D**
Center	–	–	○	○	○	○	**E**
Center and right	–	–	○	○	–	–	**F**
Left and center	–	–	○	–	○	–	**G**

Types of key

Type *1	A	B	C	D	E	F
Code	**A**	**B**	**C**	**D**	**E**	**F**

Note: *1 "A" is standard.

Contact arrangement and terminal

Contact arrangement	Code	Type of terminal
SPDT *2	**C1**	Tab (#110) and solder dual-use terminal
2PDT	**C2**	

Note: *2 2-position model only

• Key position and contact operation

2-position

Operator action (View form the front)		Contact arrangement	Contact unit			Operator position *3	
2	0					1	2
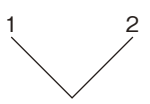 Maintained/90°	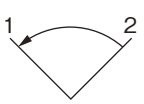 Spring return/90°	SPDT	Left	COM	NC	●	
					NO		●
		2PDT	Left	COM	NC	●	
					NO		●
			Right	COM	NC	●	
					NO		●

Terminal arrangement
View from the terminal side (the back)

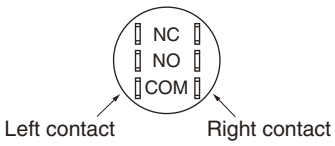

3-position

Operator action (View form the front)				Contact arrangement	Contact unit			Operator position *3		
3	6	7	1					1	2	3
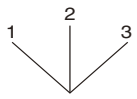 Maintained/each 45°	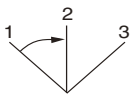 Spring/manual return/each 45°	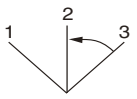 Spring/manual return/each 45°	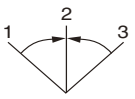 Spring return/each 45°	2PDT	Left	COM	NC	▬		
							NO			●
					Right	COM	NC		▬	
							NO	●		

Note: *3 ●, ▬: means the contact closed (ON).

Note: The manufacturing range varies depending on the model. For details, see "Types and dimensions" of this catalog.

1. Standard type, AR16 and DR16

■ Illuminated pushbutton switches (LED illuminated)

• Type number system

AR16 F0N – C2 E3 G

- AR16: Product category: Standard type
- F0N: Operator shape and action
- C2: Contact arrangement and terminal
- E3: Lamp operational voltage and light source
- G: Color of button

• Type

Operator	Appearance (Standard type)	Lamp operational voltage	Conntact arrangement	Momentary action Type	Alternate action Type
Flush rectangular	**AR16F0N, F5N** 	6V AC/DC	SPDT	**AR16F0N-C1A3□**	**AR16F5N-C1A3□**
			2PDT	**AR16F0N-C2A3□**	**AR16F5N-C2A3□**
		12V AC/DC	SPDT	**AR16F0N-C1B3□**	**AR16F5N-C1B3□**
			2PDT	**AR16F0N-C2B3□**	**AR16F5N-C2B3□**
		24V AC/DC	SPDT	**AR16F0N-C1E3□**	**AR16F5N-C1E3□**
			2PDT	**AR16F0N-C2E3□**	**AR16F5N-C2E3□**
Flush rectangular with guard	**AR16G0N, G5N** 	6V AC/DC	SPDT	**AR16G0N-C1A3□**	**AR16G5N-C1A3□**
			2PDT	**AR16G0N-C2A3□**	**AR16G5N-C2A3□**
		12V AC/DC	SPDT	**AR16G0N-C1B3□**	**AR16G5N-C1B3□**
			2PDT	**AR16G0N-C2B3□**	**AR16G5N-C2B3□**
		24V AC/DC	SPDT	**AR16G0N-C1E3□**	**AR16G5N-C1E3□**
			2PDT	**AR16G0N-C2E3□**	**AR16G5N-C2E3□**
Flush square	**AR16F0M, F5M** 	6V AC/DC	SPDT	**AR16F0M-C1A3□**	**AR16F5M-C1A3□**
			2PDT	**AR16F0M-C2A3□**	**AR16F5M-C2A3□**
		12V AC/DC	SPDT	**AR16F0M-C1B3□**	**AR16F5M-C1B3□**
			2PDT	**AR16F0M-C2B3□**	**AR16F5M-C2B3□**
		24V AC/DC	SPDT	**AR16F0M-C1E3□**	**AR16F5M-C1E3□**
			2PDT	**AR16F0M-C2E3□**	**AR16F5M-C2E3□**
Extended round	**AF16E0L, E5L** 	6V AC/DC	SPDT	**AR16E0L-C1A3□**	**AR16E5L-C1A3□**
			2PDT	**AR16E0L-C2A3□**	**AR16E5L-C2A3□**
		12V AC/DC	SPDT	**AR16E0L-C1B3□**	**AR16E5L-C1B3□**
			2PDT	**AR16E0L-C2B3□**	**AR16E5L-C2B3□**
		24V AC/DC	SPDT	**AR16E0L-C1E3□**	**AR16E5L-C1E3□**
			2PDT	**AR16E0L-C2E3□**	**AR16E5L-C2E3□**

Note: • See page 21 for the outline dimensions.

• Button color

Replace the □ mark by the color code

Color	Green	Red	White	Yellow	Orange	Blue
Code	G	R	W *1	Y	A	S

Note: *1 A combination of the transparent button and the white legend plate comes to white.

• Dimensions, mm

Flush rectangular
AR16F0N, F5N

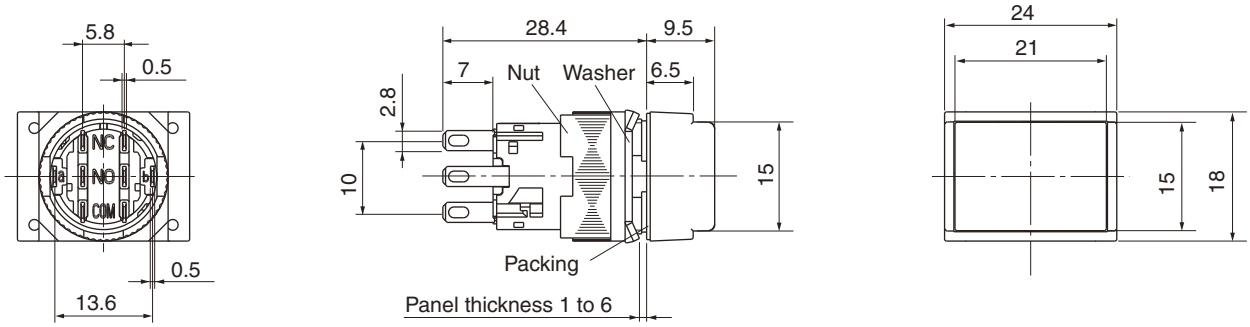

Flush rectangular with guard
AR16G0N, G5N

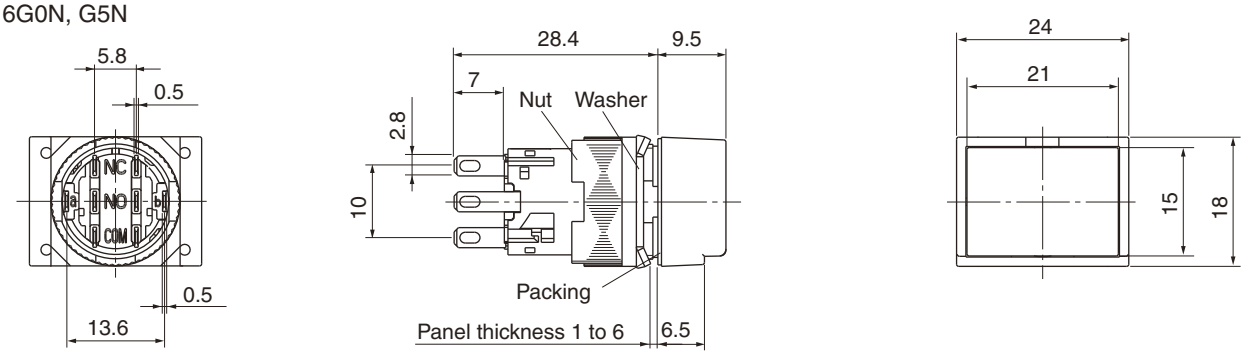

Flush square
AR16F0M, F5M

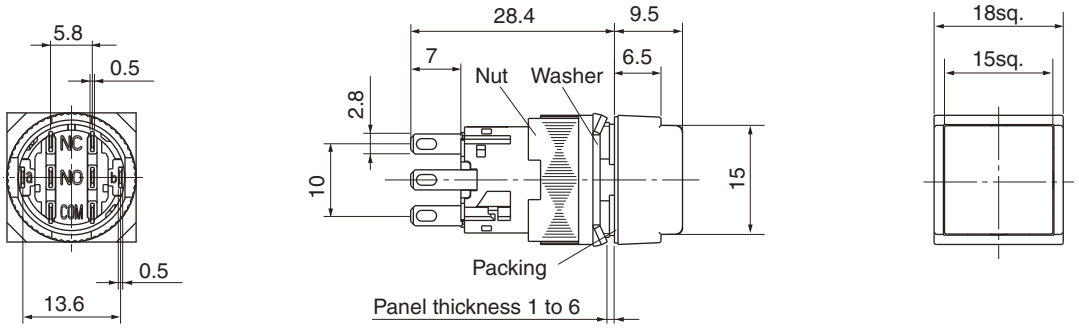

Extended round
AR16E0L, E5L

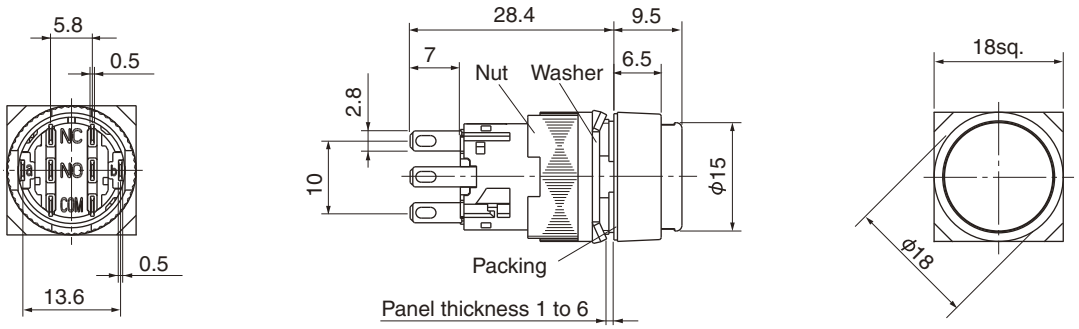

AR16 and DR16
Type numbers and dimensions

■ Pushbutton switches

• Type number system

AR16 F0T – C2 G

Product category: Standard type

Operator shape and action

Color of button

Contact arrangement and terminal

• Type

Operator	Appearance (Standard type)	Conntact arrangement	Momentary action Type	Alternate action Type
Flush rectangular	**AR16F0T, F5T** 	SPDT	**AR16F0T-C1□**	**AR16F5T-C1□**
		2PDT	**AR16F0T-C2□**	**AR16F5T-C2□**
Flush rectangular with guard	**AR16G0T, G5T** 	SPDT	**AR16G0T-C1□**	**AR16G5T-C1□**
		2PDT	**AR16G0T-C2□**	**AR16G5T-C2□**
Flush square	**AR16F0S, F5S** 	SPDT	**AR16F0S-C1□**	**AR16F5S-C1□**
		2PDT	**AR16F0S-C2□**	**AR16F5S-C2□**
Extended round	**AR16E0R, E5R** 	SPDT	**AR16E0R-C1□**	**AR16E5R-C1□**
		2PDT	**AR16E0R-C2□**	**AR16E5R-C2□**

Note: • See page 23 for the outline dimensions.

• Button color

Replace the □ mark by the color code

Color	Green	Red	Black	White	Yellow	Orange	Blue
Code	G	R	B *1	W *2	Y	A	S

Notes: *1 A combination of the transparent button and the black legend plate comes to black.
*2 A combination of the transparent button and the white legend plate comes to white.

• Dimensions, mm

Flush rectangular
AR16F0T, F5T

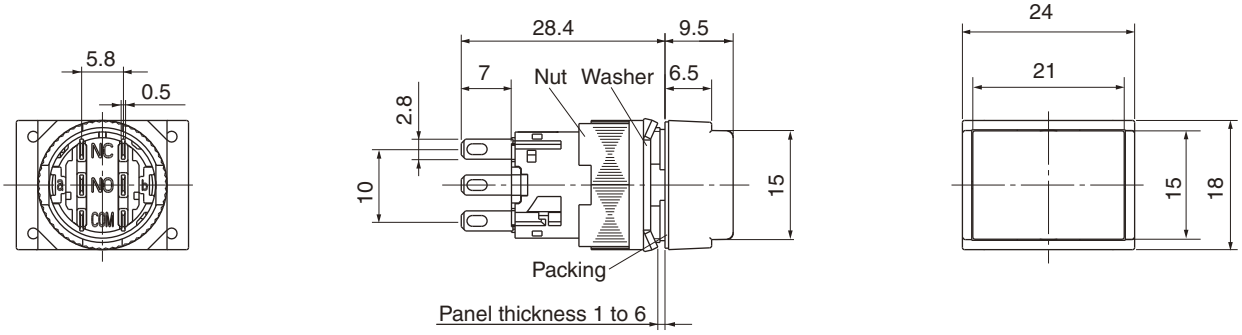

Flush rectangular with guard
AR16G0T, G5T

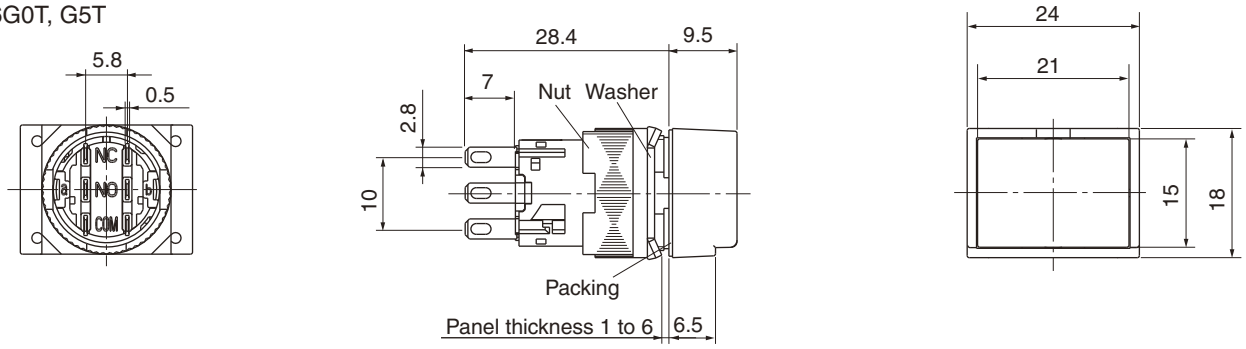

Flush square
AR16F0S, F5S

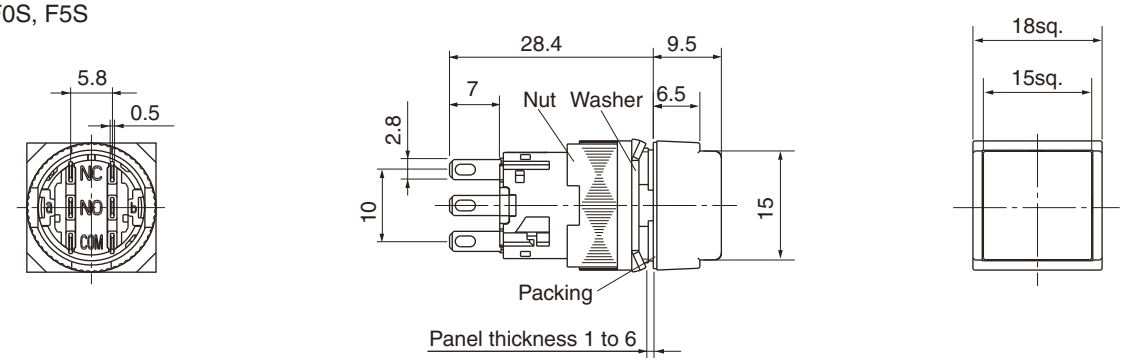

Extended round
AR16E0R, E5R

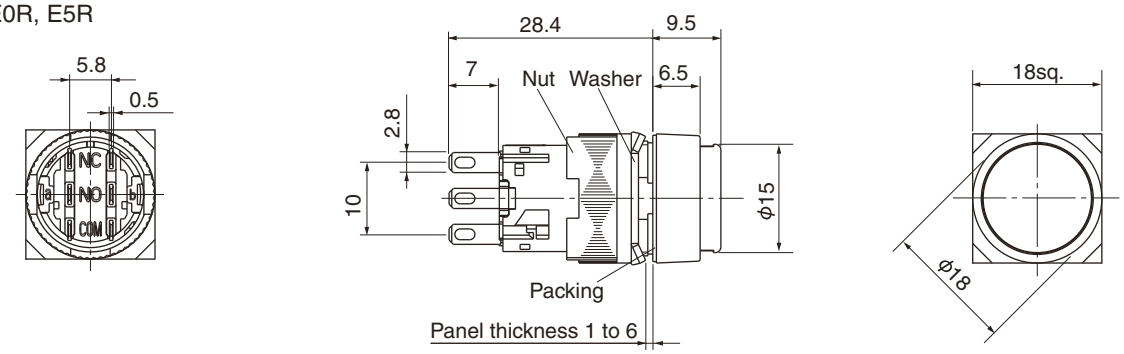

■ Pilot lights (LED illuminated)

• Type number system

DR16 D0L – E3 W

Product category: Standard type

Lens shape

Color of lens

Lamp operational voltage and light source

• Type

Lens	Appearance (Standard type)	LED lamp operational voltage	Type
Flush rectangular	**DR16F0N** 	6V AC/DC	**DR16F0N-A3□**
		12V AC/DC	**DR16F0N-B3□**
		24V AC/DC	**DR16F0N-E3□**
Flush square	**DR16F0M** 	6V AC/DC	**DR16F0M-A3□**
		12V AC/DC	**DR16F0M-B3□**
		24V AC/DC	**DR16F0M-E3□**
Extended round	**DR16E0L** 	6V AC/DC	**DR16E0L-A3□**
		12V AC/DC	**DR16E0L-B3□**
		24V AC/DC	**DR16E0L-E3□**
Dome	**DR16D0L** 	6V AC/DC	**DR16D0L-A3□**
		12V AC/DC	**DR16D0L-B3□**
		24V AC/DC	**DR16D0L-E3□**

Note: • See page 25 for the outline dimensions.

• Lens color

Replace the □ mark by the color code

Color	Green	Red	White	Yellow	Orange	Blue
Code	G	R	W *1	Y	A	S

Note: *1 A combination of the transparent lens and the white legend plate comes to white (except for dome type).

• Dimensions, mm

Flush rectangular
DR16F0N

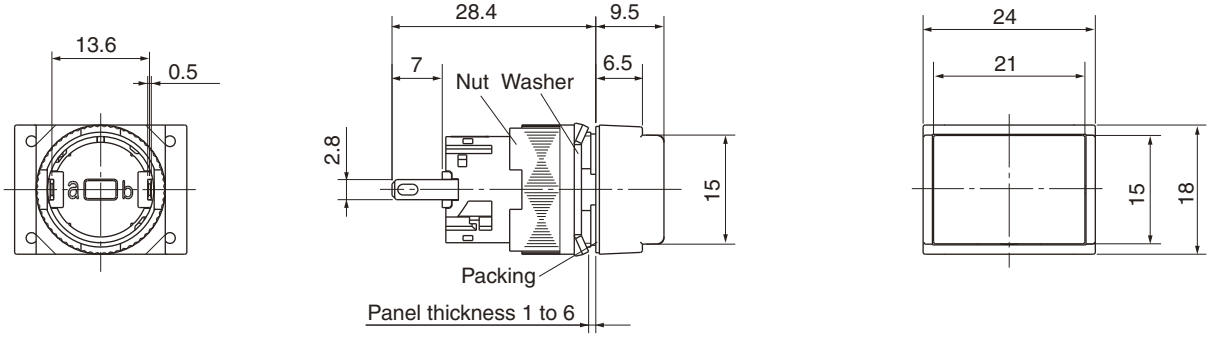

Flush square
DR16F0M

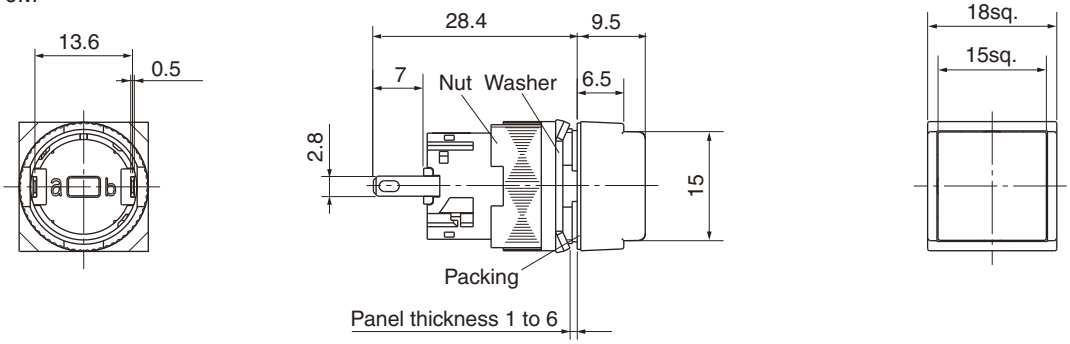

Extended round
DR16E0L

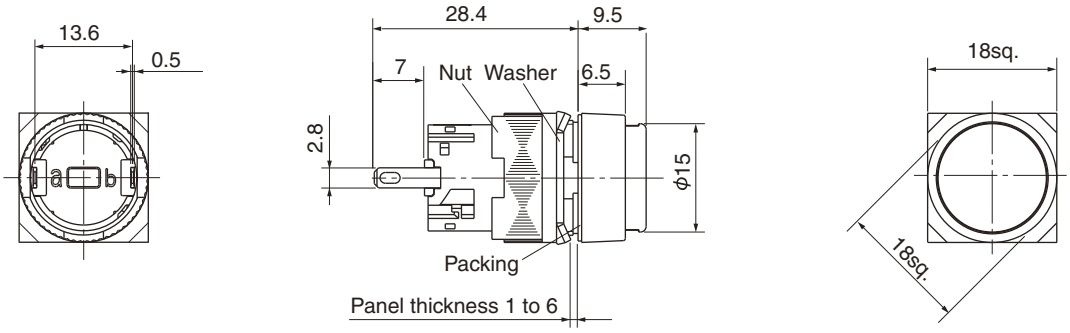

Dome
DR16D0L

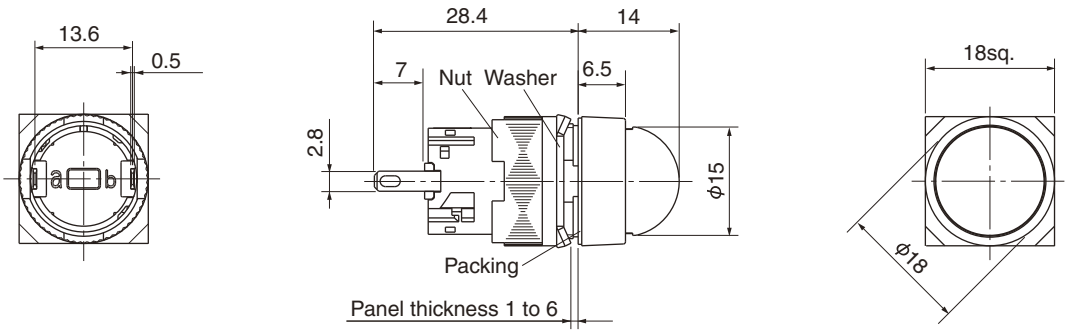

AR16 and DR16
Type numbers and dimensions

■ Selector switches (Knob type)

• Type number system

AR16 PT – 2 C2 B

- Product category: Standard type — AR16
- Operator shape — PT
- No. of positions and operator action — 2
- Contact arrangement and terminal — C2
- Color of knob: Black — B

• Type

2-position

Operator and appearance (Standard type)	No. of positions	Contact arrangement	Type: 1 2 Maintained/90°	Type: 1 2 Spring return/90°	Contact operation: Contact unit *1		Operator position *2: 1	Operator position *2: 2
Knob with rectangular bezel/**AR16PT** 	2-position	SPDT	**AR16PT-2C1B**	**AR16PT-0C1B**	Left	COM–NC	●	
			AR16PS-2C1B	**AR16PS-0C1B**		COM–NO		●
			AR16PR-2C1B	**AR16PR-0C1B**				
Knob with square bezel/**AR16PS** 		2PDT	**AR16PT-2C2B**	**AR16PT-0C2B**	Left	COM–NC	●	
			AR16PS-2C2B	**AR16PS-0C2B**		COM–NO		●
Knob with round bezel/**AR16PR** 			**AR16PR-2C2B**	**AR16PR-0C2B**	Right	COM–NC	●	
						COM–NO		●

Note: *1 Terminal arrangement of contact (View from the terminal side (the back)).

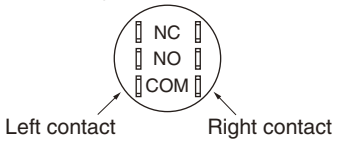

*2 ●: Means the contact closed (ON).

• See page 28 for the outline dimensions.

3-position

Operator and appearance (Standard type)	No. of positions	Contact arrangement	Type		Contact operation		
			2 / 1 3 Maintained/each 45°	2 / 1 3 Spring return/each 45°	Contact unit *1		Operator position *2 (1 2 3)
Knob with rectangular bezel/**AR16PT** 	3-position	2PDT	**AR16PT-3C2B**	**AR16PT-1C2B**	Left	COM – NC	▬
			AR16PS-3C2B	**AR16PS-1C2B**		COM – NO	●
Knob with square bezel/**AR16PS** 			**AR16PR-3C2B**	**AR16PR-1C2B**	Right	COM – NC	▬
						COM – NO	●
			2 / 1 3 Spring/manual return/each 45°	2 / 1 3 Spring/manual return/each 45°	Contact unit *1		Operator position *2 (1 2 3)
Knob with round bezel/**AR16PR** 			**AR16PT-6C2B**	**AR16PT-7C2B**	Left	COM – NC	▬
			AR16PS-6C2B	**AR16PS-7C2B**		COM – NO	●
			AR16PR-6C2B	**AR16PR-7C2B**	Right	COM – NC	▬
						COM – NO	●

Notes: *1 Terminal arrangement of contact (View from the terminal side (the back)).

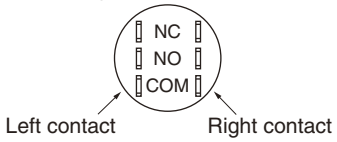

*2 ●, ▬: means the contact closed (ON).
• See page 28 for the outline dimensions.

AR16 and DR16
Type numbers and dimensions

• Dimensions, mm

Knob with rectangular bezel
AR16PT

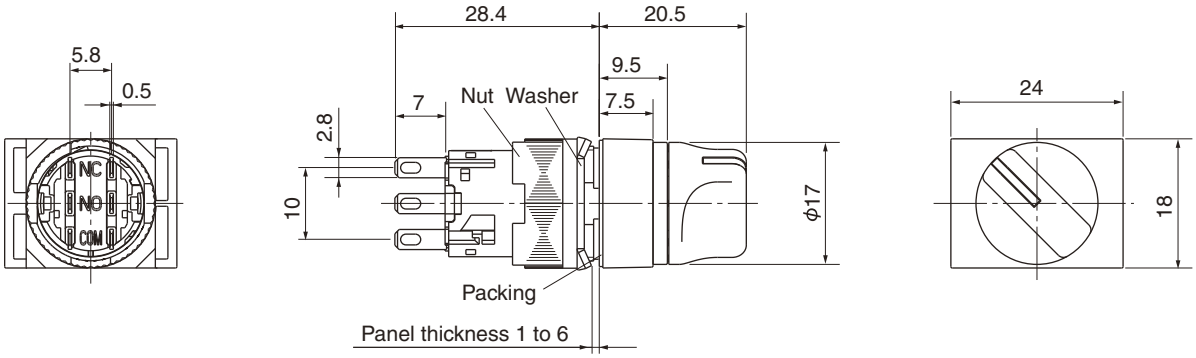

Knob with square bezel
AF16PS

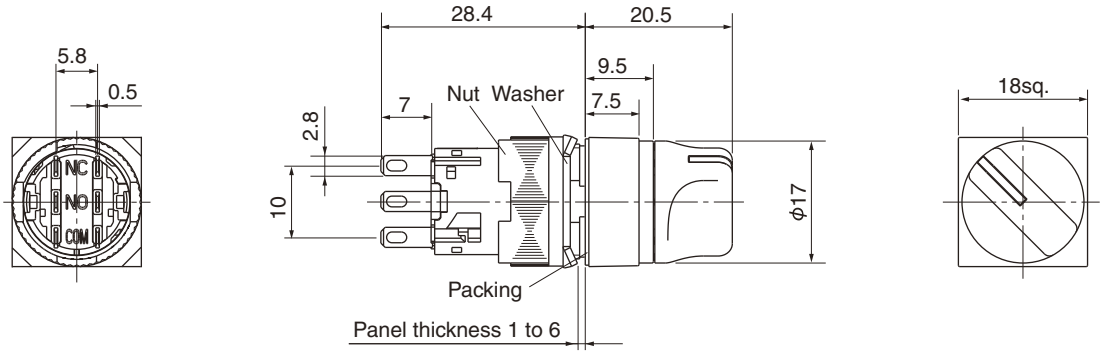

Knob with round bezel
AF16PR

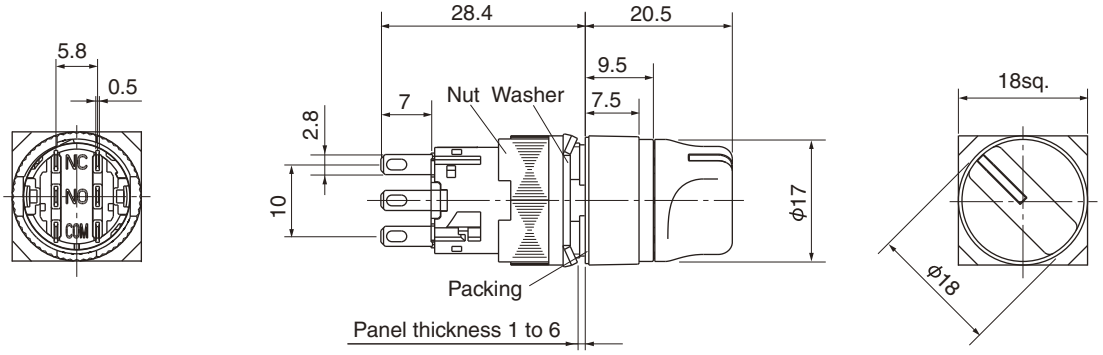

■ Selector switches (Key type)

• Type number system

AR16 JT – 2 B C2 A

- Product category: Standard type
- Operator shape
- No. of positions and operator action
- Key removable position
- Contact arrangement and terminal
- Type of key

• Type

2-position

Operator and appearance (Standard type)	No. of positions	Contact arrangement	Type: Maintained/90° (1–2)	Type: Spring return/90° (1–2)	Contact operation: Contact unit *1		Operator position *2: 1	Operator position *2: 2
Key with rectangular bezel/**AR16JT** 	2-position	SPDT	**AR16JT-2■C1A** **AR16JS-2■C1A** **AR16JR-2■C1A**	**AR16JT-0AC1A** **AR16JS-0AC1A** **AR16JR-0AC1A**	Left	COM NC	●	
						COM NO		●
Key with square bezel/**AR16JS** 		2PDT	**AR16JT-2■C2A** **AR16JS-2■C2A**	**AR16JT-0AC2A** **AR16JS-0AC2A**	Left	COM NC	●	
						COM NO		●
Key with round bezel/**AR16JR** 			**AR16JR-2■C2A**	**AR16JR-0AC2A**	Right	COM NC	●	
						COM NO		●

Notes: *1 Terminal arrangement of contact (View from the terminal side (the back)).

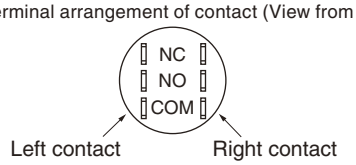

*2 ●: Means the contact closed (ON).
• See page 31 for the outline dimensions.

• Key removable position

Specify the key removal position in the square ■ mark.

Key removable position	Applied operator action 2	Applied operator action 0	Code
Left ⦸	○	○	**A**
Left•Right ⊗	○	–	**B**
Left ⊘	○	–	**D**

○: Available –: Not available

• Type of key

Type *1	A	B	C	D	E	F
Code	**A**	**B**	**C**	**D**	**E**	**F**

*1 "A" is standard.

AF16 and DF16
Type numbers and dimensions

3-position

Operator and appearance (Standard type)	No. of positions	Contact arrangement	Type: Maintained/each 45° (1 2 3)	Type: Spring return/each 45° (1 2 3)	Contact operation: Contact unit *1		Operator position *2 (1 2 3)
Key with rectangular bezel/**AR16JT** 	3-position	2PDT	**AR16JT-3■C2A**	**AR16JT-1EC2A**	Left	COM: NC / NO	NC: ▬ ; NO: ●
			AR16JS-3■C2A	**AR16JS-1EC2A**			
Key with square bezel/**AR16JS** 			**AR16JR-3■C2A**	**AR16JR-1EC2A**	Right	COM: NC / NO	NC: ▬ ; NO: ●
			Spring/manual return/each 45° (1 2 3)	Spring/manual return/each 45° (1 2 3)	Contact unit *1		Operator position *2 (1 2 3)
Key with round bezel/**AR16JR** 			**AR16JT-6■C2A**	**AR16JT-7■C2A**	Left	COM: NC / NO	NC: ▬ ; NO: ●
			AR16JS-6■C2A	**AR16JS-7■C2A**			
			AR16JR-6■C2A	**AR16JR-7■C2A**	Right	COM: NC / NO	NC: ▬ ; NO: ●

Notes: *1 Terminal arrangement of contact (View form the terminal side (the back)).

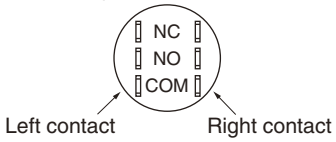

*2 ●, ▬: Means the contact closed (ON).
• See page 31 for the outline dimensions.

• Key removal position

Specify the key removal position in the square ■ mark.

Key removable position	Applied operator action 3	6	7	1	Code
Left ⊘	○	–	○	–	**A**
Left•Right ⊗	○	–	–	–	**B**
Left•Center•Right ⊛	○	–	–	–	**C**
Right ⊘	○	○	–	–	**D**
Center ⊕	○	○	○	○	**E**
Center•Right ⊕	○	○	–	–	**F**
Left•Center ⊕	○	–	○	–	**G**

○ : Available –: Not available

• Type of key

Type *1	A	B	C	D	E	F
Code	**A**	**B**	**C**	**D**	**E**	**F**

*1 "A" is standard.

• **Dimensions, mm**

Key with rectangular bezel
AR16JT

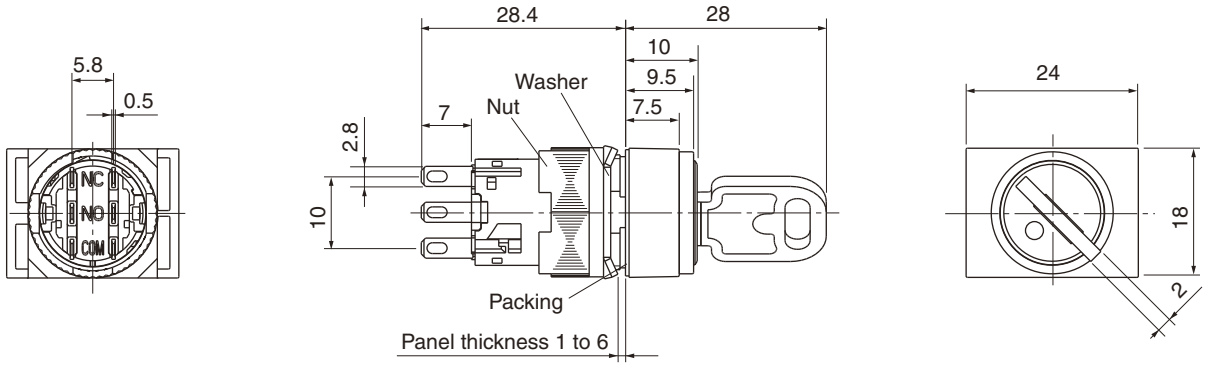

Key with square bezel
AR16JS

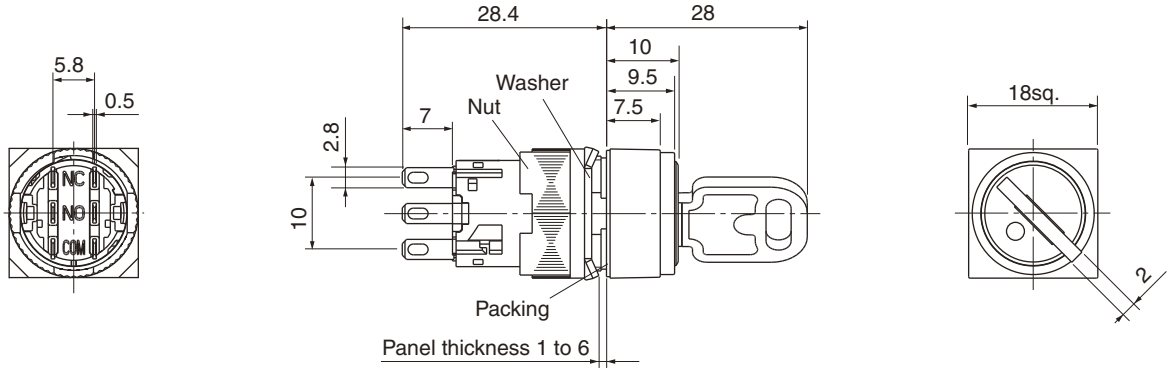

Key with round bezel
AR16JR

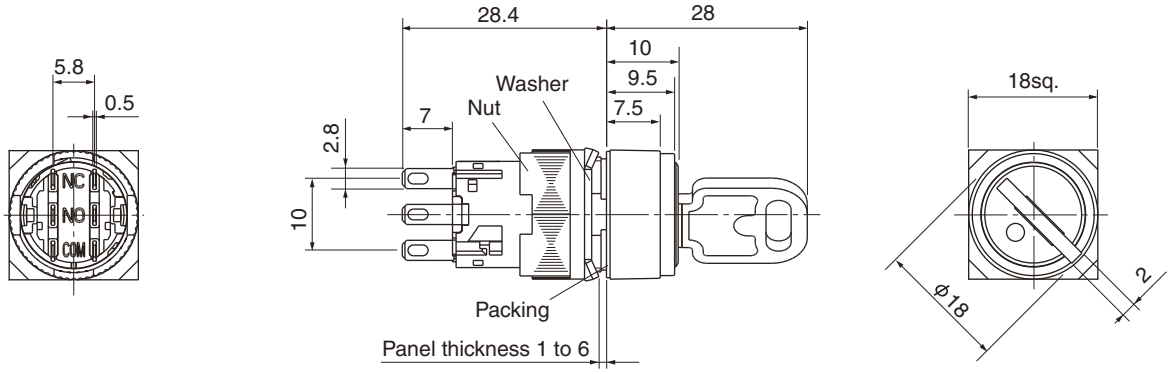

■ Illuminated pushbutton switches (LED lamp)

• Type number system

AF16 F0N – C2 E3 G

- AF16: Prodect category: Thin type
- F0N: Operator shape and action
- C2: Contact arrangement and terminal
- E3: Lamp operational voltage and light source
- G: Color of button

• Type

Operator	Appearance (Thin type)	LED lamp operational voltage	Conntact arrangement	Momentary action Type	Alternate action Type
Flush rectangular	**AF16F0N, F5N** 	6V AC/DC	SPDT	**AF16F0N-C1A3□**	**AF16F5N-C1A3□**
			2PDT	**AF16F0N-C2A3□**	**AF16F5N-C2A3□**
		12V AC/DC	SPDT	**AF16F0N-C1B3□**	**AF16F5N-C1B3□**
			2PDT	**AF16F0N-C2B3□**	**AF16F5N-C2B3□**
		24V AC/DC	SPDT	**AF16F0N-C1E3□**	**AF16F5N-C1E3□**
			2PDT	**AF16F0N-C2E3□**	**AF16F5N-C2E3□**
Flush square	**AF16F0M, F5M** 	6V AC/DC	SPDT	**AF16F0M-C1A3□**	**AF16F5M-C1A3□**
			2PDT	**AF16F0M-C2A3□**	**AF16F5M-C2A3□**
		12V AC/DC	SPDT	**AF16F0M-C1B3□**	**AF16F5M-C1B3□**
			2PDT	**AF16F0M-C2B3□**	**AF16F5M-C2B3□**
		24V AC/DC	SPDT	**AF16F0M-C1E3□**	**AF16F5M-C1E3□**
			2PDT	**AF16F0M-C2E3□**	**AF16F5M-C2E3□**
Flush round	**AF16F0L, F5L** 	6V AC/DC	SPDT	**AF16F0L-C1A3□**	**AF16F5L-C1A3□**
			2PDT	**AF16F0L-C2A3□**	**AF16F5L-C2A3□**
		12V AC/DC	SPDT	**AF16F0L-C1B3□**	**AF16F5L-C1B3□**
			2PDT	**AF16F0L-C2B3□**	**AF16F5L-C2B3□**
		24V AC/DC	SPDT	**AF16F0L-C1E3□**	**AF16F5L-C1E3□**
			2PDT	**AF16F0L-C2E3□**	**AF16F5L-C2E3□**

Note: • The panel cutting dimensions differ depending on the operator shape of thin type model. See page 44.
• For the dimensions, see page 33.

•Button color

Replace the □ mark by the color code.

Color	Green	Red	White	Yellow	Orange	Blue
Code	G	R	W *1	Y	A	S

Note: *1 A combination of the translucent button and the white legend plate comes to white lens.

• Dimensions, mm

Flush rectangular
AF16F0N, F5N

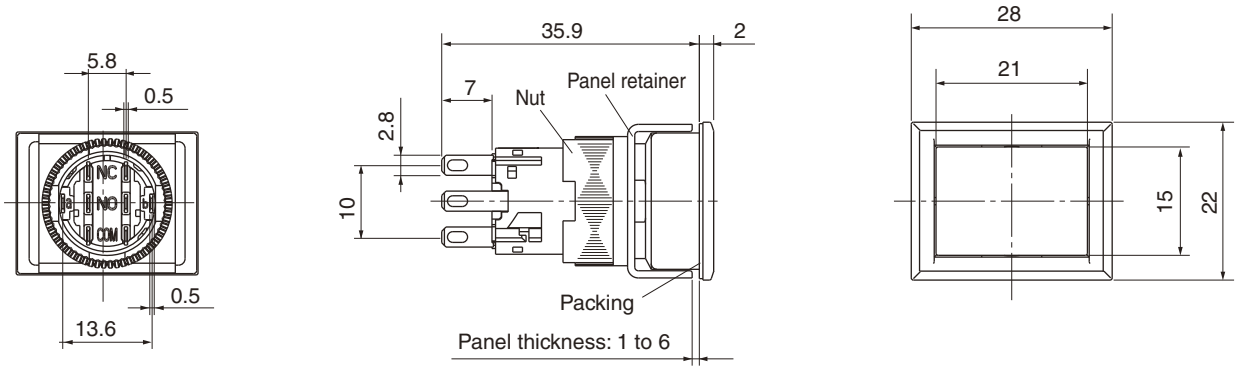

Flush square
AF16F0M, F5M

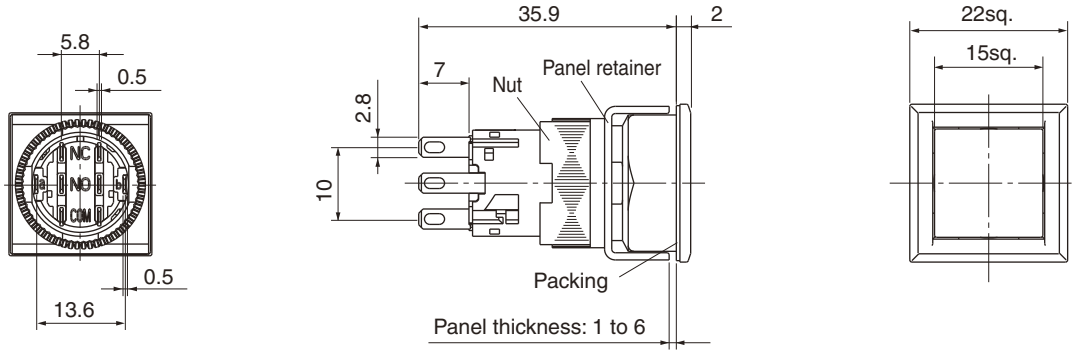

Flush round
AF16F0L, F5L

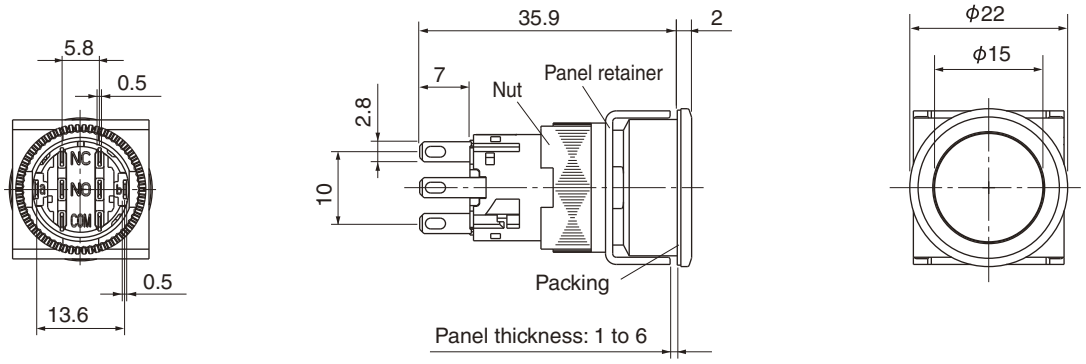

■ Pushbutton switches

• Type number system

AF16 F0T – C2 G

- AF16: Prodect category: Thin type
- F0T: Operator shape and action
- C2: Contact arrangement and terminal
- G: Color of button

• Type

Operator	Appearance (Thin type)	Contact arrangement	Momentary action Type	Alternate action Type
Flush rectangular	**AF16F0T, F5T** 	SPDT	**AF16F0T-C1□**	**AF16F5T-C1□**
		2PDT	**AF16F0T-C2□**	**AF16F5T-C2□**
Flush square	**AF16F0S, F5S** 	SPDT	**AF16F0S-C1□**	**AF16F5S-C1□**
		2PDT	**AF16F0S-C2□**	**AF16F5S-C2□**
Flush round	**AF16F0R, F5R** 	SPDT	**AF16F0R-C1□**	**AF16F5R-C1□**
		2PDT	**AF16F0R-C2□**	**AF16F5R-C2□**

Note: • The panel cutting dimensions differ depending on the operator shape of thin type model. See page 44.
• For the dimensions, see page 35.

• Button color

Replace the □ mark by the color code.

Color	Green	Black	Red	White	Yellow	Orange	Blue
Code	G	B *1	R	W *2	Y	A	S

Notes: *1 A combination of the translucent button and the black legend plate comes to black.
*2 A combination of the translucent button and the white legend plate comes to white.

• Dimensions, mm

Flush rectangular
AF16F0T, F5T

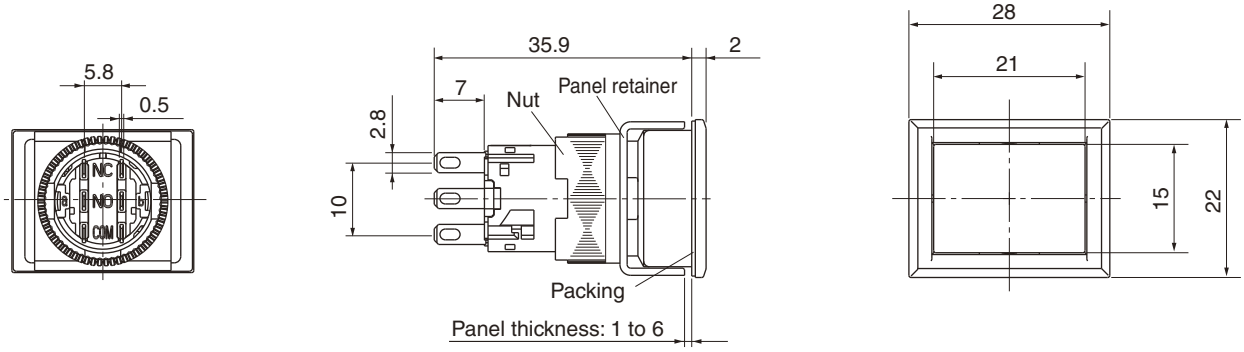

Flush square
AF16F0S, F5S

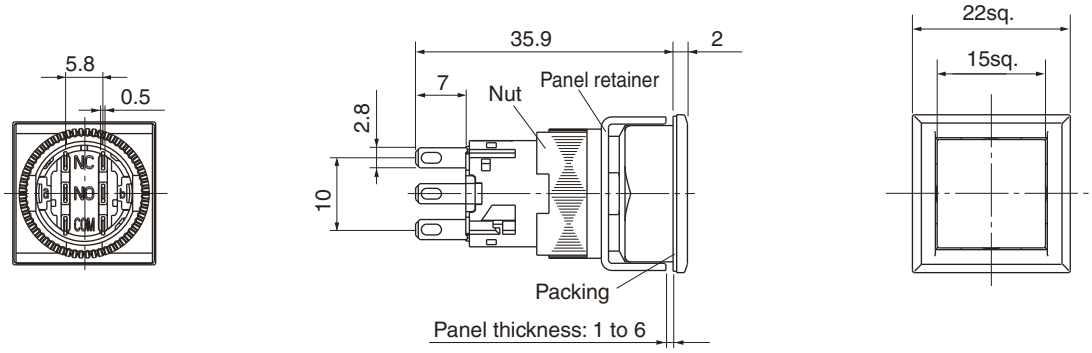

Flush round
AF16F0R, F5R

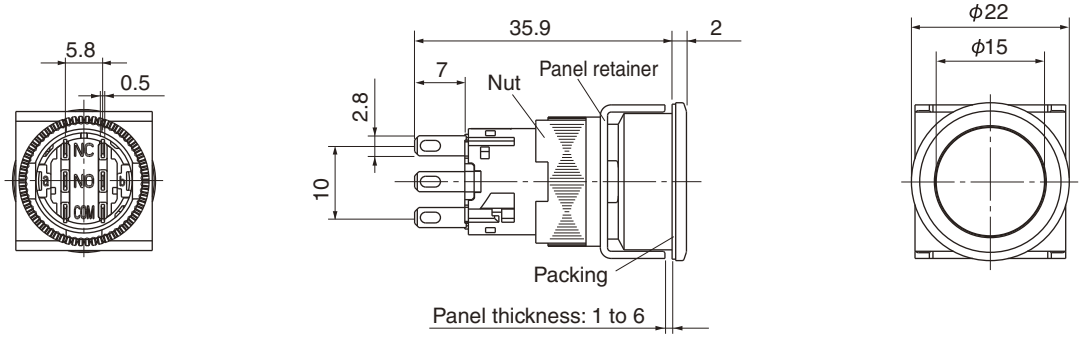

■ Pilot lights (LED lamp)

• Type number system

DF16 F0N – E3 W

Product category: Thin type

Lens shape

Color of lens

Lamp operational voltage and light source

• Type

Lens	Appearance (Thin type)	LED lamp operational voltage	Type
Flush rectangular	**DF16F0N** 	6V AC/DC	**DF16F0N-A3□**
		12V AC/DC	**DF16F0N-B3□**
		24V AC/DC	**DF16F0N-E3□**
Flush square	**DF16F0M** 	6V AC/DC	**DF16F0M-A3□**
		12V AC/DC	**DF16F0M-B3□**
		24V AC/DC	**DF16F0M-E3□**
Flush round	**DF16F0L** 	6V AC/DC	**DF16F0L-A3□**
		12V AC/DC	**DF16F0L-B3□**
		24V AC/DC	**DF16F0L-E3□**

Note: • The panel cutting dimensions differ depending on the lens shape of thin type model. See page 44.
• For the dimensions, see page 37.

• Lens color

Replace the □ mark by the color code

Color	Green	Red	White	Yellow	Orange	Blue
Code	G	R	W *1	Y	A	S

Note: *1 A combination of the transparent lens and the white legend plate comes to white.

• Dimensions, mm

Flush rectangular
DF16F0N

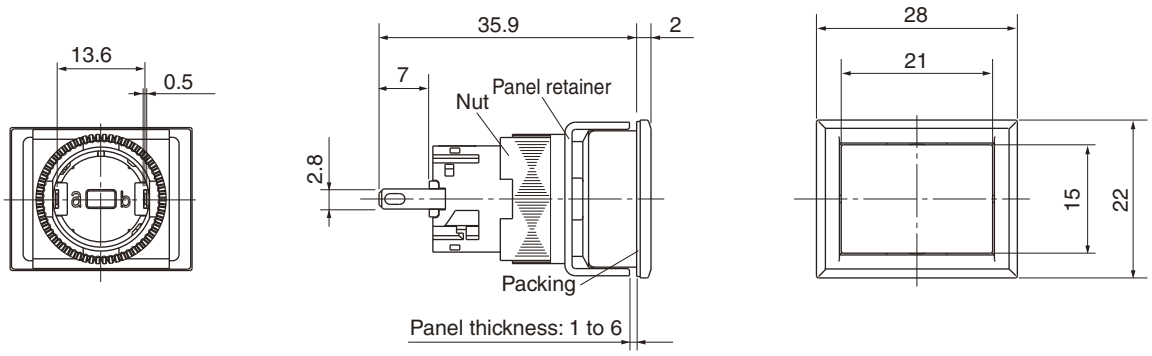

Flush square
DF16F0M

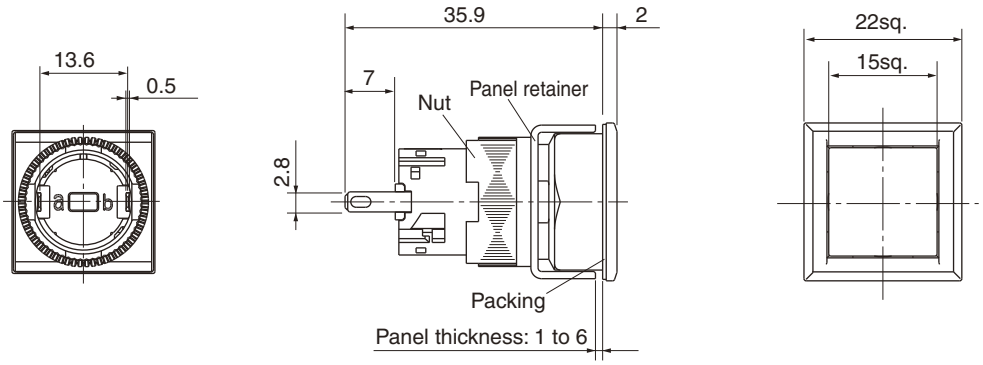

Flush round
DF16F0L

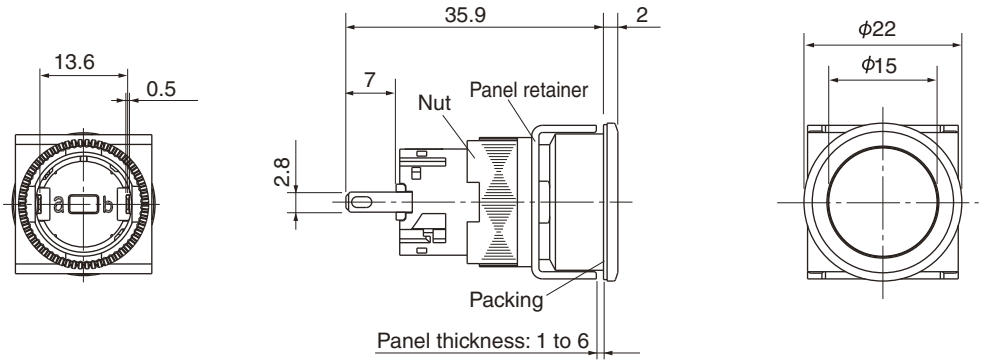

■ Selector switches (Knob type)

• Type number system

AF16 PT – 2 C2 B

- Product category: Thin type
- Operator shape
- No. of positions and operator action
- Contact arrangement and terminal
- Color of knob: Black

• Type

2-position

Operator (Thin type)	Conntact arrangement	Type: Maintained/90° (1, 2)	Type: Spring return/90° (1, 2)	Contact operation: Contact unit *1			Operator position *2: 1	Operator position *2: 2
Knob with rectangular bezel/**AF16PT** 	SPDT	**AF16PT-2C1B**	**AF16PT-0C1B**	Left	COM	NC	●	
		AF16PS-2C1B	**AF16PS-0C1B**					
		AF16PR-2C1B	**AF16PR-0C1B**			NO		●
Knob with square bezel/**AF16PS** 	2PDT	**AF16PT-2C2B**	**AF16PT-0C2B**	Left	COM	NC	●	
		AF16PS-2C2B	**AF16PS-0C2B**			NO		●
Knob with round bezel/**AF16PR** 		**AF16PR-2C2B**	**AF16PR-0C2B**	Right	COM	NC	●	
						NO		●

Notes: *1 Terminal arrangement of contact (view from terminal side).

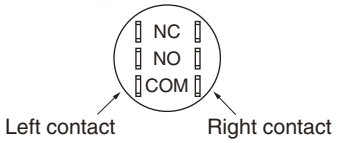

*2 ●: Contact closed.
• The panel cutting dimensions differ depending on the operator shape of thin type model. See page 44.
• For the dimensions, see page 40.

3-position

Operator (Thin type)	Contact arrangement	Type		Contact operation		
		1 2 3 Maintained/each 45°	1 2 3 Spring return/each 45°	Contact unit *1		Operator position *2 (1 2 3)
Knob with flush square/**AF16PT** 	2PDT	**AF16PT-3C2B**	**AF16PT-1C2B**	Left	COM: NC	▬
		AF16PS-3C2B	**AF16PS-1C2B**		COM: NO	●
Knob with square bezel/**AF16PR** 		**AF16PR-3C2B**	**AF16PR-1C2B**	Right	COM: NC	▬
					COM: NO	●
		1 2 3 Spring/manual return/each 45°	1 2 3 Spring/manual return/each 45°	Contact unit *1		Operator position *2 (1 2 3)
Knob with round bezel/**AF16PR** 		**AF16PT-6C2B**	**AF16PT-7C2B**	Left	COM: NC	▬
		AF16PS-6C2B	**AF16PS-7C2B**		COM: NO	●
		AF16PR-6C2B	**AF16PR-7C2B**	Right	COM: NC	▬
					COM: NO	●

Notes: *1 Terminal arrangement of contact (view from terminal side).

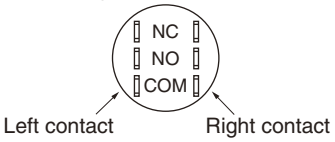

*2 ●, ▬: Contact closed.
• The panel cutting dimensions differ depending on the operator shape of thin type model. See page 44.
• For the dimensions, see page 40.

AF16 and DF16
Type numbers and dimensions

• Dimensions, mm

Knob with rectangular bezel
AF16PT

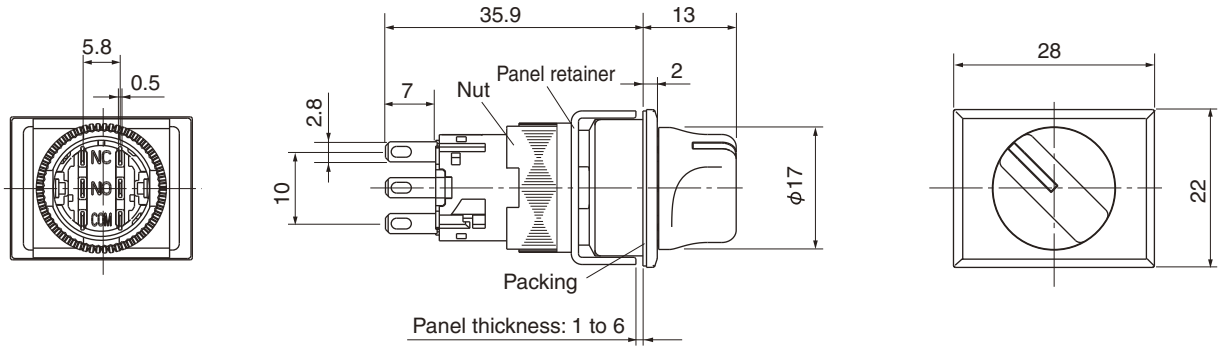

Knob with square bezel
AF16PS

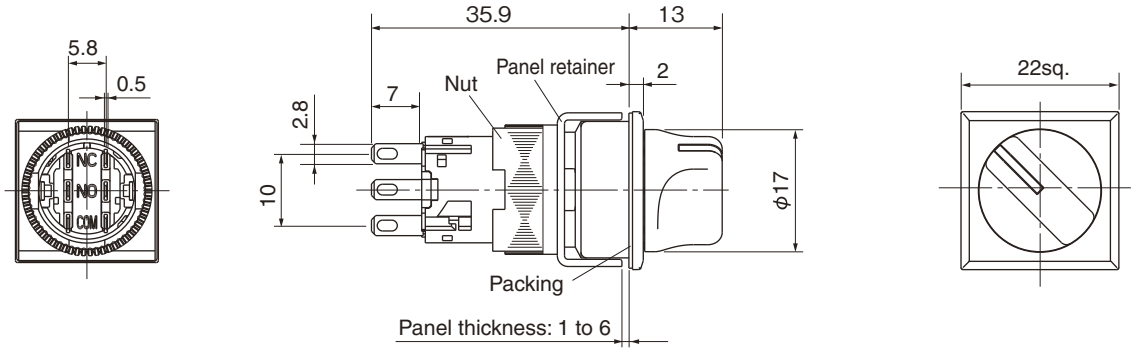

Knob
AF16PR

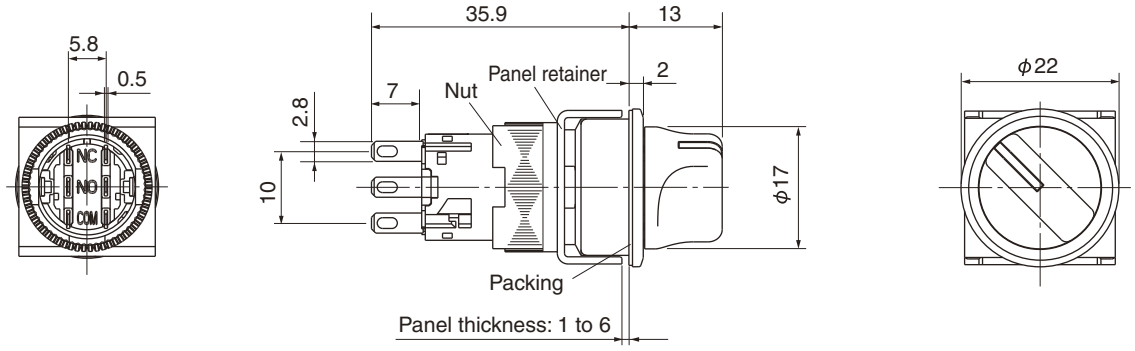

■ Selector switches (Key type)

• Type number system

AF16 JT – 2 B C2 A

- Product category: Standard type
- Operator shape
- No. of positions and operator action
- Key removable position
- Contact arrangement and terminal
- Type of key

• Type

2-position

Operator (Thin type)	Contact arrangement	Type: Maintained/90° (1–2)	Type: Spring return/90° (1–2)	Contact operation: Contact unit *1		Operator position *2: 1	Operator position *2: 2
Key with rectangular bezel/**AF16JT** 	SPDT	**AF16JT-2■C1A**	**AF16JT-0AC1A**	Left	COM–NC	●	
		AF16JS-2■C1A	**AF16JS-0AC1A**		COM–NC	●	
		AF16JR-2■C1A	**AF16JR-0AC1A**		COM–NO		●
Key with square bezel/**AF16JS** 	2PDT	**AF16JT-2■C2A**	**AF16JT-0AC2A**	Left	COM–NC	●	
		AF16JS-2■C2A	**AF16JS-0AC2A**	Left	COM–NO		●
Key with round bezel/**AF16JR** 		**AF16JR-2■C2A**	**AF16JR-0AC2A**	Right	COM–NC	●	
				Right	COM–NO		●

Notes: *1 Terminal arrangement of contact (view from terminal side).

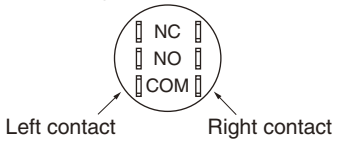

*2 ●: Contact closed.
• The panel cutting dimensions differ depending on the operator shape of thin type model. See page 44.
• For the dimensions, see page 43.

• Key removable position

Replace the ■ mark by the removable positiom code.

Removable position	Applied operatior position 2	Applied operatior position 0	Code
Left ⦸	○	○	**A**
Left•Right ⊗	○	–	**B**
Left ⦸	○	–	**C**

○: Available –: Not available

• Type of key

Type *1	A	B	C	D	E	F
Code	**A**	**B**	**C**	**D**	**E**	**F**

*1 "A" is standard.

AF16 and DF16
Type numbers and dimensions

3-position

Operator (Thin type)	Contact arrangement	Type: Maintained/each 45° (1 2 3)	Type: Spring return/each 45° (1 2 3)	Contact operation: Contact unit *1		Operator position *2 (1 2 3)
Key with Flush square/ **AF16JT** 	2PDT	**AF16JT-3■C2A**	**AF16JT-1EC2A**	Left	COM – NC	▬
		AF16JS-3■C2A	**AF16JS-1EC2A**		COM – NO	●
Key with square bezel/ **AF16JS** 		**AF16JR-3■C2A**	**AF16JR-1EC2A**	Right	COM – NC	▬
					COM – NO	●
		Spring/manual return/each 45° (1 2 3)	Spring/manual return/each 45° (1 2 3)	Contact unit *1		Operator position *2 (1 2 3)
Key with round bezel/ **AF16JR** 		**AF16JT-6■C2A**	**AF16JT-7■C2A**	Left	COM – NC	▬
		AF16JS-6■C2A	**AF16JS-7■C2A**		COM – NO	●
		AF16JR-6■C2A	**AF16JR-7■C2A**	Right	COM – NC	▬
					COM – NO	●

Notes: *1 Terminal arrangement of contact (view from terminal side).

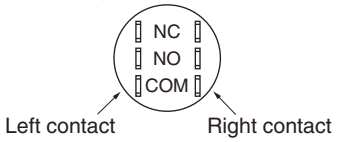

*2 ●, ▬: Contact closed.
- The panel cutting dimensions differ depending on the operator shape of thin type model. See page 44.
- For the dimensions, see page 43.

• Key removable position

Replace the ■ mark by the removable positiom code.

Removable position	Applied operatior position 3	6	7	1	Code
Left ⊘	○	–	○	–	**A**
Left•Right ⊗	○	–	–	–	**B**
Left•Center•Right ⊛	○	–	–	–	**C**
Right ⊘	○	○	–	–	**D**
Center ⊕	○	○	○	○	**E**
Center•Right ⊕	○	○	–	–	**F**
Left•Center ⊕	○	–	○	–	**G**

○ : Available –: Not available

• Type of key

Type *1	A	B	C	D	E	F
Code	**A**	**B**	**C**	**D**	**E**	**F**

*1 "A" is standard.

• Dimensions, mm

Key with recrangular bezel
AF16JT

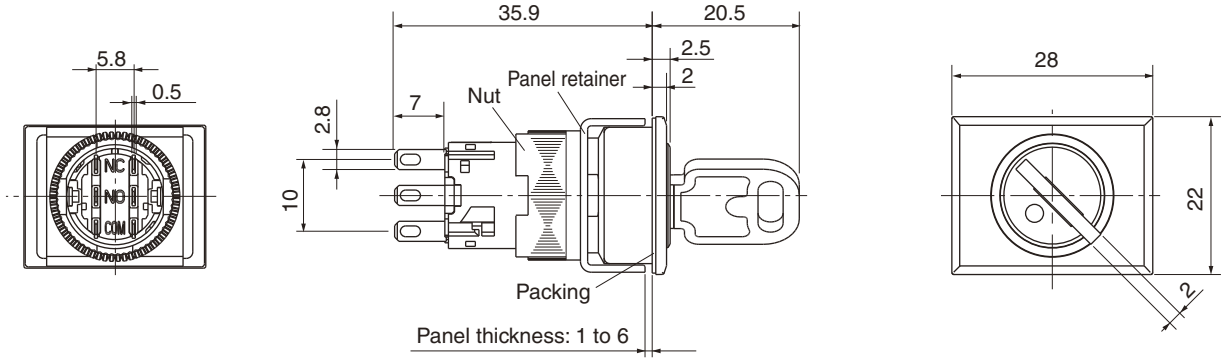

Key with square bezel
AF16JS

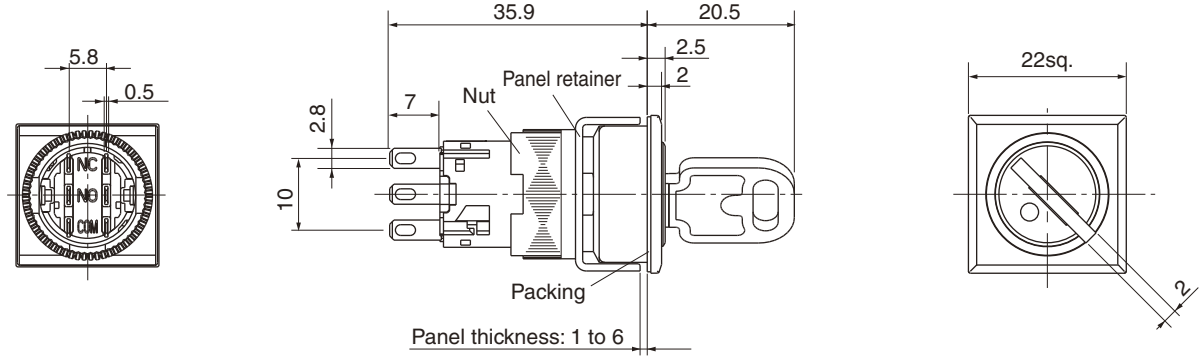

Key with round bezel
AF16JR

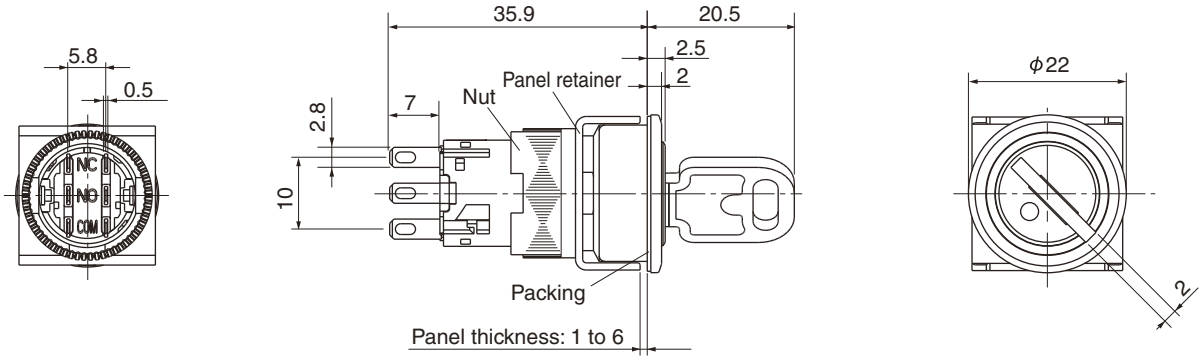

AR16, DR16 and AF16, DF16
Panel cutout and mounting

Safety Precautions

Read the Operating Instructions carefully before mounting, wiring, operating, servicing, or inspecting the command switch. Make sure that the Operating Instructions is delivered to the final user of the command switch.

- The safety precautions are classified into two levels, Warning and Caution, with meanings described as follows:

⚠ Warning : If operation is incorrect, a dangerous situation may occur, resulting in death or serious injuries.

⚠ Caution : If operation is incorrect, a dangerous situation may occur, resulting in minor to medium injuries or physical damage to equipment.

An item described under CAUTION may result in a serious accident, depending on the situation.

⚠ Warning
• Do not touch or approach any live part while power is supplied. An electric shock or burning may result. • Be sure to turn off the power before mounting, dismounting, wiring, or inspecting the product. An electric shock, burning from short-circuiting or equipment malfunction may result.

⚠ Caution
• Wire the product according to the wiring instructions in the Operating Instructions. Make sure that the size of the wires is suitable for the voltage and applied current. The wrong wiring may result in fire, accidents or malfunctions. • Treat the product as industrial waste when it is to be discarded.

■ Panel cutout, mm

- **Standard type** (common)

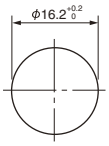

When requiring rotation prevention or positional stabilization

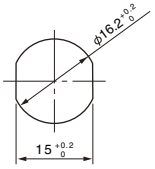

Note: When changing the operating angle position of the selector switch, the panel cutout also requires an angle change.

- **Thin type** (The panel cutout dimension varies depending on the operator or lens shape.)
- Rectangular type

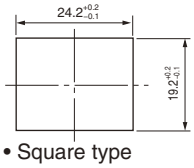

- Square type

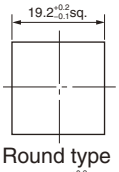

- Round type

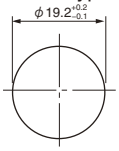

When requiring rotation prevention or positional stabilization

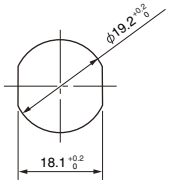

Note: When changing the operating angle position of the selector switch, the panel cutout also requires an angle change.

■ Installation on panel

- As shown in the figure below, insert the switch main unit into the mounting hole from the front of the panel, attach the washer and tightening nut from the back of the panel, and securely tighten the nut with the wrench (AHX601).

Note: The proper tightening torque is 0.6 to 1.0 N•m.

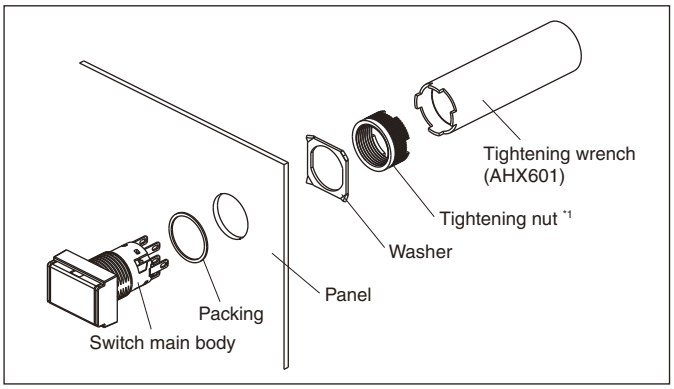

Note: *1 Do not use pliers or other improper tools to tighten the nut, or tighten it excessively, Otherwise, the nut may be damaged or the switch may malfunction.

- **Thin type**

As shown in the figure below, insert the switch main unit into the mounting hole from the front of the panel, attach the panel retainer from the back of the panel, and securely tighten the nut with the wrench (AHX601).

Note: The proper tightening torque is 0.6 to 1.0 N•m.

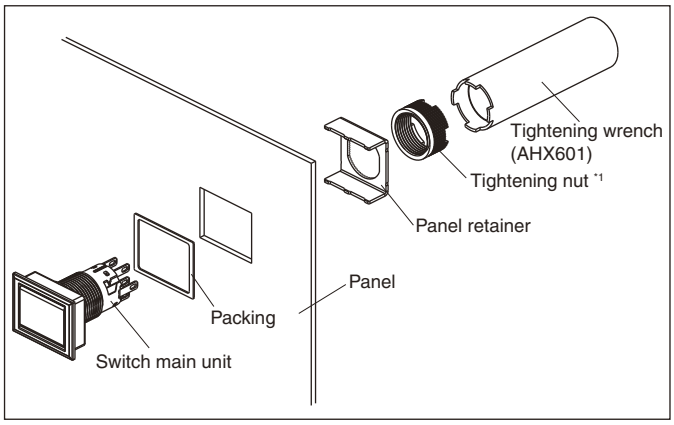

Note: *1 Do not use pliers or other improper tools to tighten the nut, or tighten it excessively, Otherwise, the nut may be damaged or the switch may malfunction.

■ Applicable panel thickness

Tables 1 and 2 show applicable panel thickness.

Table 1 Standard type (AR16/DR16 series)

Mounting condition		Applicable panel thickness, mm
Without accessories		1 to 6
With accessories	Protective cover	1 to 4
	Dust-tight cover	1 to 4
	Various sockets	1 to 3.2
	Terminal cover	1 to 3.2
	Protective cover + various sockets	1 to 1.6
	Protective cover + Terminal cover	1 to 1.6
	Dust-tight cover + various sockets	Cannot be used.
	Dust-tight cover + Terminal cover	Cannot be used.

Table 2 Thin type (AF16/DF16 series)

Mounting condition		Applicable panel thickness, mm
Without accessories		1 to 6
With accessories	Protective cover	1 to 4
	Various sockets	1 to 3.2
	Terminal cover	1 to 3.2
	Protective cover + various sockets	1 to 3.2
	Protective cover + Terminal cover	1 to 3.2

■ High-density mounting

Minimum mounting space (pitch) without accessories, mm

• **Standard type** (AR16/DR16 series)

Illuminated pushbuttons, pushbuttons, selectors, and pilot lights

①Rectangular ②Square ③Round, dome

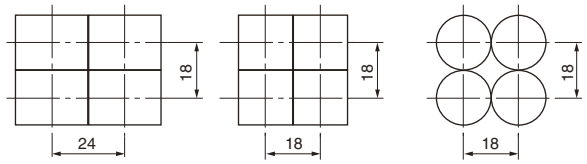

Note: Determine the mounting pitch by taking the operatbility and wiring work into consideration.

• **Thin type** (AF16/DF16 series)

Illuminated pushbuttons, pushbuttons, selectors, and pilot lights

①Rectangular ②Square ③Round, dome

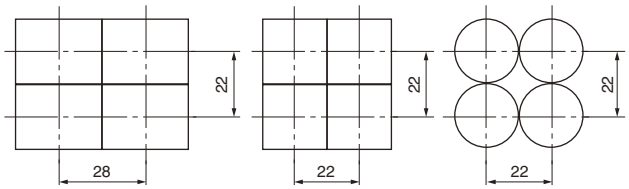

Note: Determine the mounting pitch by taking the operatbility and wiring work into consideration.

Minimum mounting space (pitch) with accessories, mm

• Protective cover AHX669 and AHX826 (Standard type)

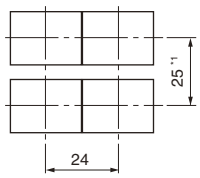

*1 43: with the cover fully opened

• Protective cover AHX671 (Standard type)

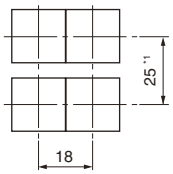

*1 43: with the cover fully opened

• Protective cover AF6D826 (Thin type)

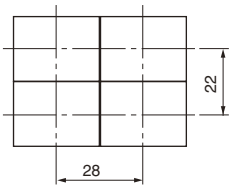

• Protective cover AF6D827 (Thin type)

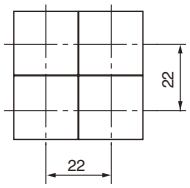

• Dust-tight cover AHX668 (Standard type)

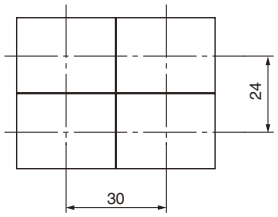

• Dust-tight cover AHX822 (Standard type)

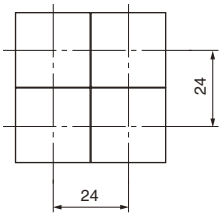

• Minimum mounting spaces (pitch) with sockets, such as connector socket (AR6S691) and PC board-use socket (AR6S692) are the same as those without accessories.

Note: Determine the mounting pitch by taking the operability and wiring workability into consideration.

Safety Precautions

Read the Operating Instructions carefully before mounting, wiring, operating, servicing, or inspecting the command switch. Make sure that the Operating Instructions is delivered to the final user of the command switch.

- The safety precautions are classified into two levels, Warning and Caution, with meanings described as follows:

⚠ Warning : If operation is incorrect, a dangerous situation may occur, resulting in death or serious injuries.

⚠ Caution : If operation is incorrect, a dangerous situation may occur, resulting in minor to medium injuries or physical damage to equipment.

An item described under CAUTION may result in a serious accident, depending on the situation.

⚠ Warning
• Do not touch or approach any live part while power is supplied. An electric shock or burning may result. • Be sure to turn off the power before mounting, dismounting, wiring, or inspecting the product. An electric shock, burning from short-circuiting, or equipment malfunction may result.

⚠ Caution
• Wire the product according to the wiring instructions in the Operating Instructions. Make sure that the size of the wires is suitable for the voltage and applied current. The wrong wiring may result in fire, accidents, or malfunctions. • Treat the product as industrial waste when it is to be discarded.

■ Method of replacing color lens, legend plate, and screen

Replacing color lens (screen)

- Standard type (AR16/DR16 series)

To remove the color lens, fit the color lens remover (AHX618) to the grooves in the color lens and pull out the lens, or pry the lens lightly with a small slotted screwdriver.

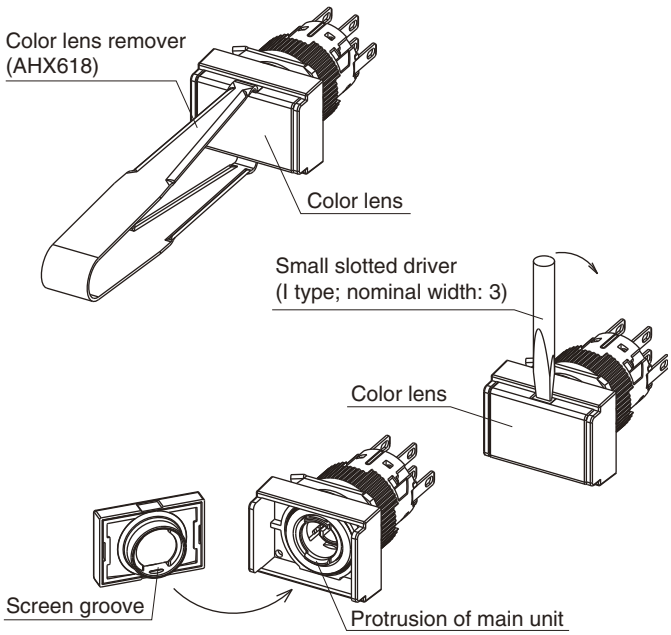

- Thin type (AF16/DF16 Series)

To remove the color lens, pry the lens lightly with a small slotted screwdriver.
If one side of the color lens is separated from the screen, further insert the screwdriver and remove the color lens together with the screen. Do not pry the packing when doing this.
To fit the color lens, align the protrusion of switch main body with the groove of the screen, and press-fit them.

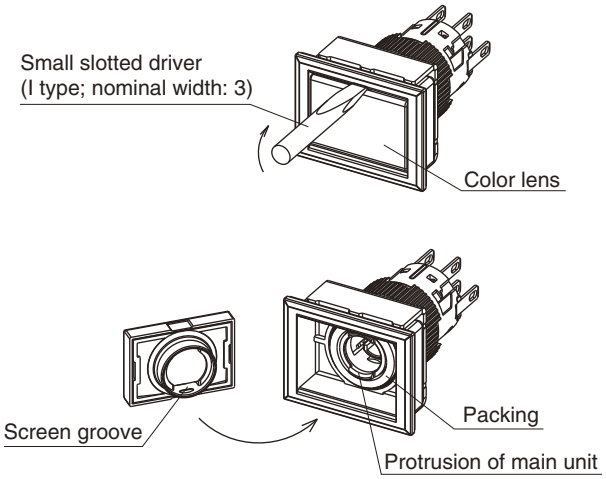

- Removing screen

Insert the tip of a small slotted screwdriver into the groove and press down the screwdriver in the direction of the arrow.

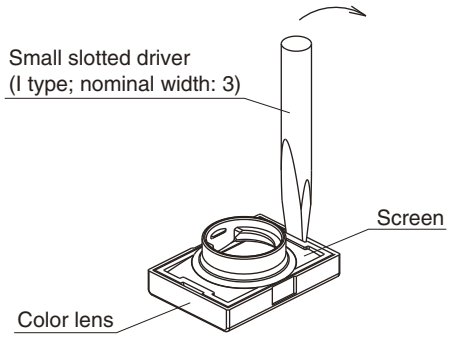

Fitting color lens to screen

• Rectangular type

Set the textured surface side of the legend plate with the screen side, then press-fit the color lens. When press-fitting, make sure that your fingers do not touch the reflective surface inside the screen.

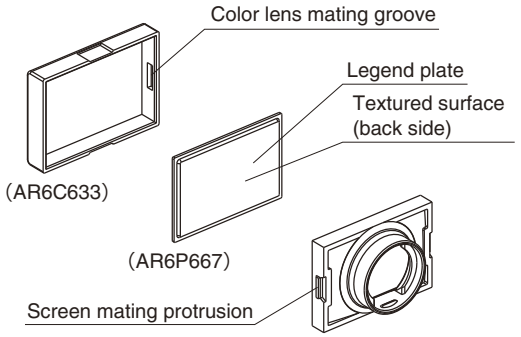

• Square type

Set the textured surface side of the legend plate with the screen side, align the screen protrusion with the color lens groove, and press-fit together. When press-fitting, make sure that your fingers do not touch the reflective surface inside the screen.

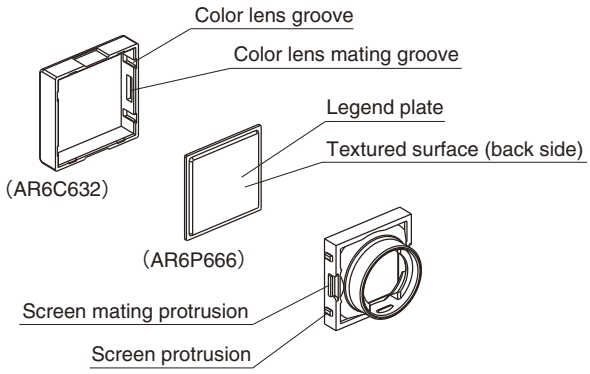

• Round type

Align the protrusion of the legend plate with the groove of the screen, also align the screen protrusion and color lens groove, and press-fit together. When press-fitting, make sure that your fingers do not touch the reflective surface inside the screen.

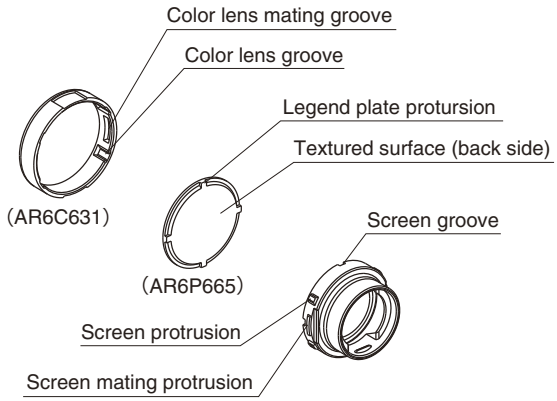

• For alternate action type of illuminated pushbutton switches and pushbutton switches, do not remove the color lenses (screens) in locked (depressed) state. The internal mechanisms may be damaged.

■ Engraving legend plate

Engrave the surface of the legend plate.

- Material: Acrylic resin
- Engraving depth: 0.5 mm max.
- Paint: Use a paint that has alcohol as its main ingredient, such as melamine paint, phthalic acid paint, or acrylic paint.

• Legend plate size

Shape	Size, mm
Rectangular	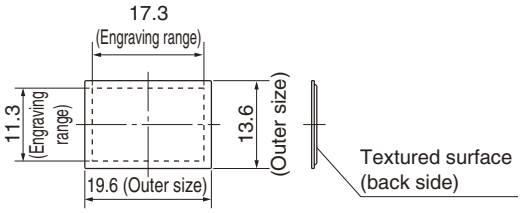
Square	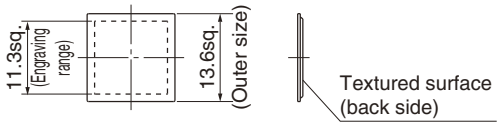
Round	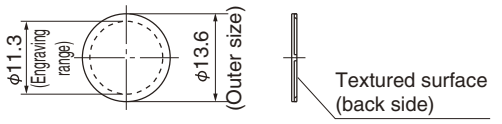

Notes: *1 A legend sheet may be used, provided that the external dimensions do not exceed the corresponding outer size specified in the above table and that the thickness is 0.1 mm or below. (No legend sheets are provided with the product. Please prepare on customer side.)
*2 Do not engrave any part other than the legend plate.

■ Changing the operating angle position of selector switch

The bezel is separated from the knob (key), which makes it easy to change the operating angle position in 45° increments (the AR16 series rectangular or square type only).
The following figures show a knob type example. The key type is the same.

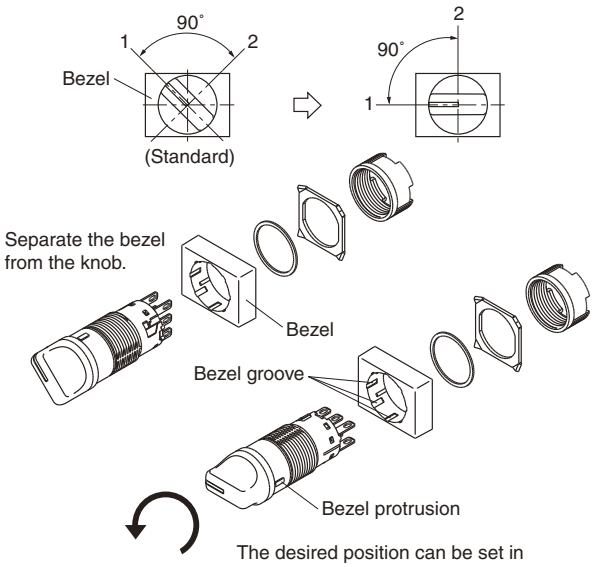

The desired position can be set in 45° intervals.
Set the knob to the desired position, align the groove of the knob, and press-fit the knob.

■ Method of replacing lamp

- To remove the LED lamp, insert the lamp changer (AHX672) in the LED lamp and pull out the LED lamp.
  To mount the LED lamp, align the lamp terminal side of the main unit with the electrode side of the LED lamp, lightly hold the lamp by hand or with the head of the lamp changer (AHX672), and insert the lamp.
  The LED lamp has no polarity, so it can be powered by either AC or DC.

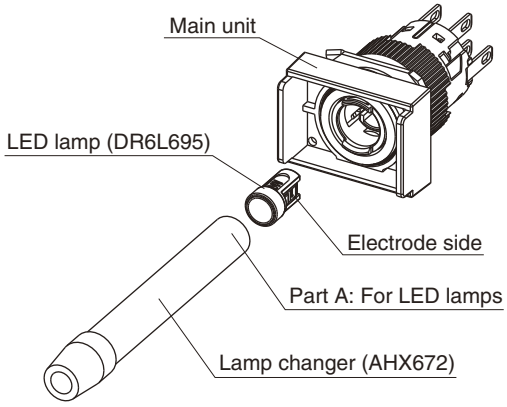

- Handling of LEDs
  LED whose luminous color is green or blue is sensitive to static electricity. Be careful when handling the LED. Take thorough measures against static electricity and surges when handling the product. The following anti-electrostatic measure is recommended.
  Use a wristband or anti-electrostatic glove when replacing LED lamps.

■ Wiring

- Wiring to tab terminal
  Use 110 (2.8mm) series receptacles for tab terminals.
- Pay attention to the following points when soldering.
  Type of solder: Use resin-core solder.
  Use a soldering iron with a maximum power consumption of 60W (350(C) within five seconds. Make sure that the terminal is free of tension during soldering. Also, do not deform the terminal.
- The melting point of lead-free solder is slightly high, which may make soldering difficult. Use a soldering iron that has a large soldering tip or high heat generation.
- Connectable wires
  Two solid wires with a maximum diameter of 0.8 mm (solder)
  One stranded wire with a maximum area of 0.75 mm^2 (solder)
  Flat-type connection terminal
  (2.8□-1.25-5) 0.5 to 1.25mm^2
  (2.8□-0.5-5) 0.2 to 0.5mm^2
- Use of contact blocks
  When using NO and NC contacts in the same contact block, avoid connection that involves opposite polarity or wiring from different types of power supply.
- For wiring to adjacent terminals, use the terminal cover (AR6Y261) to prevent short-circuit, or an insulation tube to assure isolation. For solder terminals, caution is required if thick wires, in particular, are connected or a large quantity of solder is used.

• Terminal arrangement

Model	Circuit diagram (example)	Terminal arrangement (view from the terminal (back) side)
Illuminated pushbuttons (2PDT)	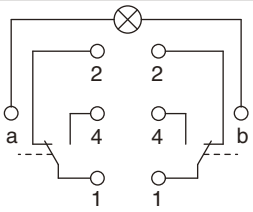	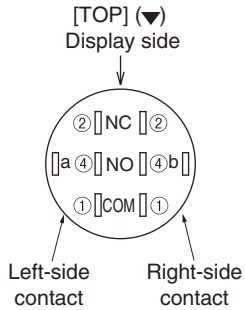
Pushbuttons and selector switches (2PDT)	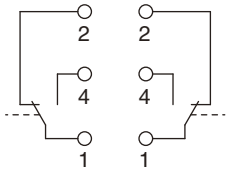	
Pilot lights	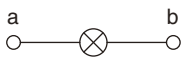	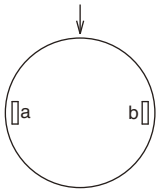

Note: Only the left-side contact is applicable to the SPDT mechanism.

■ LED Lamps

- LED lamp malfunctioning (incorrect lighting)
  The LED lamp incorporates a circuit to prevent malfunctioning. Compared with conventional models, this LED lamp is less likely to malfunction, but it incorporates no absolute countermeasures.
  A minute current (approximately 0.25 mA) turns on the LED lamp. A leakage current from the surge absorption circuit or noncontact circuit, or stray capacitance between cables, may also turn on the LED lamp.
  In this case, a countermeasure (e.g., attaching a resistor in parallel with the LED lamp) is required.
- Countermeasure against malfunctioning
  Malfunctioning can be prevented by connecting a shunt resistor (R) in parallel. The resistance in that case varies with the model and operating conditions.

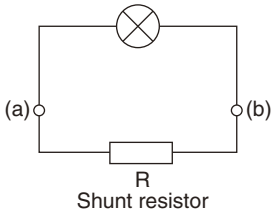

In the case of 24V DC
R: 10kΩ (0.5W)

In the case of 24V AC
R: 2kΩ (2W)

- The permissible fluctuation range for the operating voltage of the 6V model is ±5% and that for the 12V or 24V model is ±10%. If the operating voltage is always 5% or 10% higher, select a resistor that will make the operating current the same as or lower than the rated current, and connect the resistor in series to the LED lamp.

- Calculation of external resistance
  Example: Connecting a 24V red LED to a 48V circuit

$$\text{External resistance [}\Omega\text{]} = \frac{\text{Circuit voltage [V] - Rated voltage [V]}}{\text{Rated current [A]}}$$

$$= \frac{48-24}{7.5\times10^{-3}} = 3200\ [\Omega]$$

  → Therefore, use an external resistor of 3.3kΩ 1W.
  (Select a resistor with sufficient wattage.)

- Surges
  High-brightness LED products use elements that are sensitive to static electricity. Keep in mind that an unusual voltage, such as a surge voltage, may cause the product to malfunction.

■ Selector Switches

- **Knob type**
  The knob can be operated by turning it lightly. Be careful to operate the knob with a torque not exceeding 1N•m.

- **Key type**
- Types of keys
  Five types (B, C, D, E, and F) are available in addition to the standard type (type A).
  Make sure that the symbol on the key coincides with the symbol on the switch.

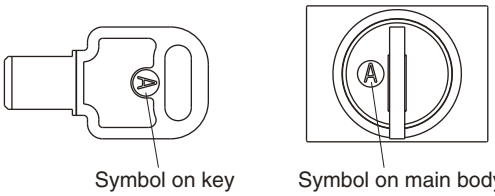

- Fully insert the key into the switch and turn the key. Do not pull on the key while turning it.
- Operate the key with a torque not exceeding 0.1N•m.
- Do not forcibly insert or extract the key.
- Do not attempt to operate the switch with the key insufficiently inserted or insert the wrong key. Otherwise, a malfunction may result.

■ Connector sockets

- Connectable wires
  Stranded wire: 0.3 to 0.75 mm^2 (AWG22 to AWG18)
- Arrange for a receptacle terminal separately.
  Nichifu Co., Ltd.: CMC62895F
- Check the insertion position and insert the receptacle terminal into the socket after connecting the wires to the receptacle terminal. (The wires once connected cannot be disconnected.) Lightly pull the wires and check that the receptacle terminal is securely connected to the socket.

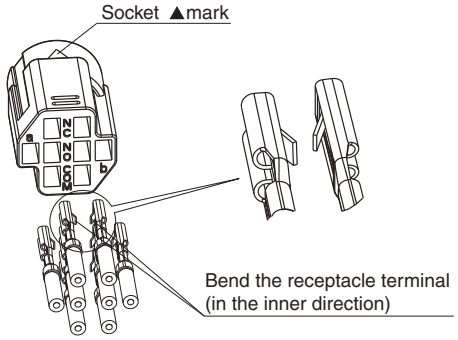

- Align the ▲ mark of the socket and the TOP (▼) mark of the switch, and put the socket and switch together.

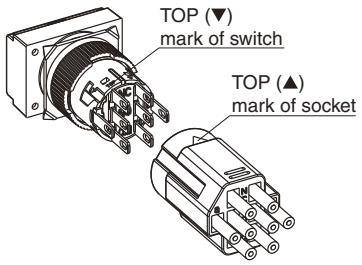

■ Socket for PC board

- Minimum mounting space (pitch), mm

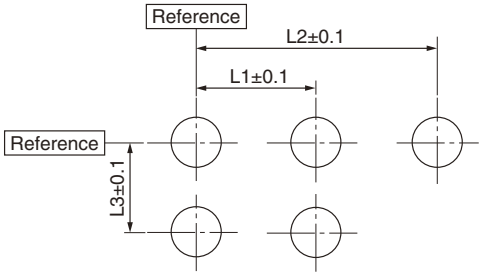

Obtain the mounting pitch based on a reference line to minimize the cumulative error.
Make sure that the centering difference between the switch and the PCB socket does not exceed 0.25 mm.

- Apply the following panel cutout dimensions (in mm) to stabilize the operator position of the switch when combined with the socket.

AR16/DR16 (common)

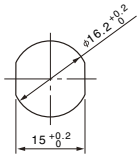

AF16/DF16 (round type)

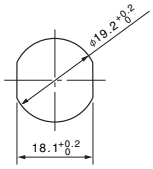

- Mount the switch to the panel. Make sure that the switch is free of any bends.

- PC board processing dimensions (in mm) as viewed from the socket mounting side.

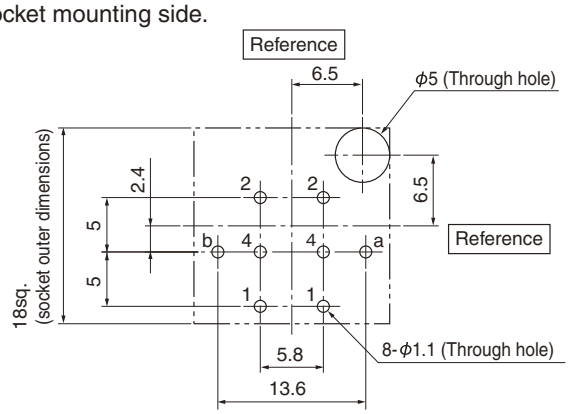

- The reference is the center of the socket (switch).
- Switch terminal arrangement (as viewed from the socket mounting side)

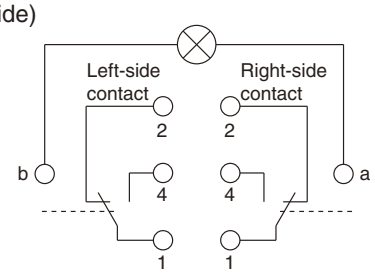

Note: The right-side contact is connected in the case of an SPDT contact.

- Insert the socket so that the lever will be located in the 5mm-diameter through hole of the PC board. Set the lever to the lock position as viewed from the socket mounting side.

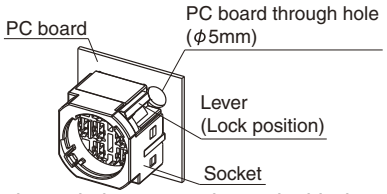

- Combine the switch-mounted panel with the socket on the PC board, and solder the socket terminal.

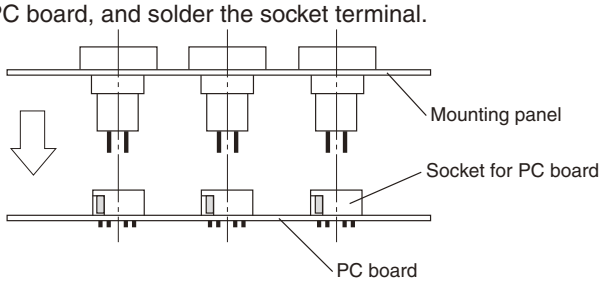

- Combine the PCB socket and the panel while making sure that the socket terminal does not fall off, and turn over the socket to do the soldering. Do not leave any space between the PC board and socket.
- After combining them, check that the lever as viewed from the soldering side is in the lock position, and solder the terminal.

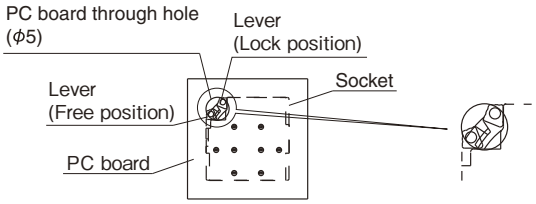

- Pay attention to the following points when soldering.
  - Type of solder: Use resin-core solder.
  - Finish soldering at 350°C within 5 seconds.
  - Do not wash the socket.
  - Solder the socket so that no flux adheres to it.
- The melting point of lead-free solder is slightly higher than lead solder, which may make soldering difficult. Use a soldering iron with a large tip or that provides a high heat generation.
- Using a spacer between the panel and the PC board
  Make sure that the distance shown in the figure below is maintained between the panel and the PC board. The spacer dimensions vary with the thickness of the mounting panel.

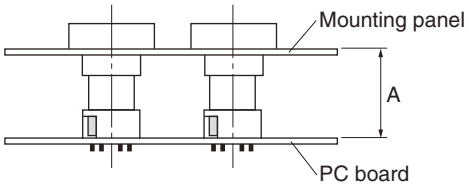

Series	A (mm)
AR16/DR16	30.2±0.2
AF16/DF16	37.7±0.2

- Mounting and removing PC board sockets
  - Removing
    Push down the socket levers all the way viewed from the soldering side in the direction of the free position and remove the PC board sockets. After removal, the socket levers will return to the lock position automatically.
  - Mounting
    Check that the socket lever as viewed from the soldering side is in the lock position, lightly insert the terminal and socket so their position is aligned with the switch on the panel, press the socket-mounting portion of the PC board, and securely insert the entire socket until the socket lever snaps. (Check that the lever as viewed from the soldering side is in the lock position.)
- Use the switch within the following rated voltage range when the PCB socket is used.
  - Rated insulation voltage: 60V
  - Rated operational voltage: 24V
- Use a 1.6-mm-thick double-sided through-hole printed circuit board made of copper-plated laminated epoxy resin on a woven glass fabric base.
- In case of standard type (AR16 and DR16 series), beware that the adopted models are not allowed to attach the protective cover to some models and that the adopted models cannot be mounted to some models afterward.

■ Others

- Operation
  Do not hit or flip the button, or the button may be damaged.
  Be sure to operate the button by hand.
  Do not pull the button if the switch is an alternate action type.

- High-density mounting of illuminated type
  When continuously lighting pilot lights or pressing illuminated pushbuttons, keep in mind that the ambient temperature may exceed the rated value due to the heat radiated by the lamp. Be sure to ventilate the lamp /switch if the mounting panel is not made of metal or if the mounting panel is an enclosed type.

- Usage locations
  - Be sure to use and store the product within the rated ambient temperature and humidity ranges.
  - Although the product resists ordinary cutting oils and coolant oils, do not use the unit in places where special oils may be sprayed onto the product.
  - If dusts or filings accumulate in the gap between the button and the frame, the switch may fail to operate normally. Take appropriate measures, such as using a dust-proof protective cover, if the switch is to be used in places that are subject to dusts or filings.
  - The AR16/DR16 series and AF16/DF16 series are for indoor use. Make sure that the product is not exposed to direct sunlight.
  - Do not use the product in the places that are subject to the adverse effects of ozone or corrosive gases.

Description	Type	Dimensions, mm

Protective cover (for Standard type)


KKD07-246


KKD07-247


KKD07-248

Type	Used with
AHX669	AR16F0N, F5N, F0T, F5T
AXH826 *	
AHX671	AR16F0M, F5M, F0S, F5S AR16E0L, E5L, E0R, E5R

* This cover returns to the home position with spring action to prevent accidental operation (Packing is provided).
Note: The cover cannot be used with the flush rectangular with guard type models.

AHX669

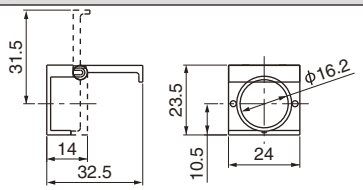

AHX826

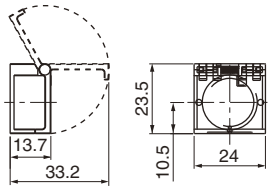

AHX671

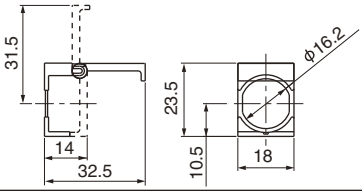

Protective cover (for Thin type)


KKD07-249


KKD07-250

Type	Used with
AF6D826-□	AF16F0N, F0T
AF6D827-□	AF16F0M, F0S

This cover prevents accidental operation.
Note: • The protective cover and the button are made of an integral structure.
• Enter the color code in the square box .

Color	Green	Red	Transparent *	Yellow	Orange	Blue
Code	**G**	**R**	**C**	**Y**	**A**	**S**
Color code of main unit	G	R	W, B	Y	A	S

* When the color code of the main unit is W, a combination of the transparent lens and the white legend plate comes to white. When it is B, a combination of the transparent lens and the black legend plate comes to black.
• This cover returns to the home position with spring action.
• Not applicable to alternate models.
• Dimensions when connected with a push-button switch (unit: mm)

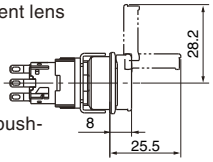

AF6D826

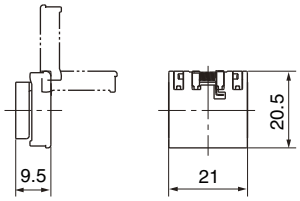

AF6D827

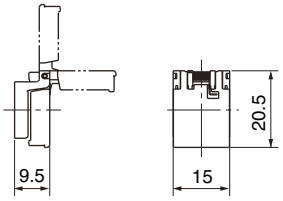

Dust-proof cover (for Standard type)

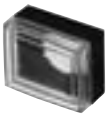
KKD07-251

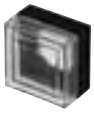
KKD07-252

Type	Used with
AHX668	AR16F0N, F5N, F0T, F5T
AHX822	AR16F0M, F5M, F0S, F5S AR16E0L, E5L, E0R, E5R

This cover seals the operator section to prevent powder or dust from invading inside the switch (Packing is provided).

AHX668

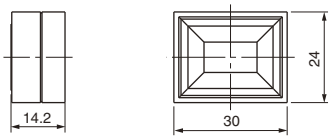

AHX822

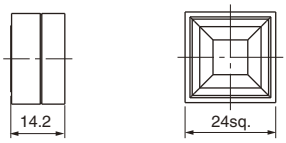

Terminal cover


KKD07-253

Type	Used with
AR6Y261	Illuminated pushbutton switch, pushbutton switch, selector switch, pilot light

Protective cover for insulation between terminals and live parts.
Note: • Dimensions when connected with a switch (pilot light) (unit: mm)

Standard type

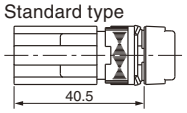

Thin type

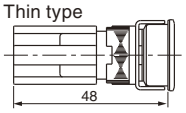

• Wiring work should be made first, and attach the cover to the switch (pilot light).
• Use cables of sheath outer diameter of ϕ2.8mm or less.

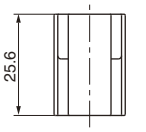

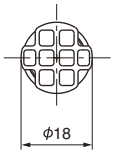

Description	Type	Dimensions, mm
Socket for connector  KKD07-255		

Type	Used with
AR6S691-C	Illuminated pushbutton switch, pushbutton switch, selector switch, pilot light

By combining with receptacle terminals, this can be used as a connector.
Note: • The receptacle terminal is not supplied.
Please prepare the receptacle terminal Model No. CMC62895-F made by NICHIFU Co.,Ltd. on your side.
• Dimensions when connected with a switch (pilot light) (unit: mm)

Standard type

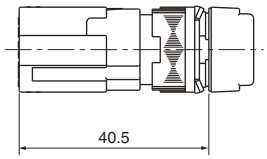

Thin type

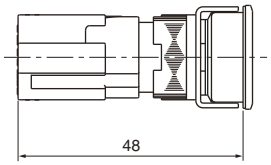

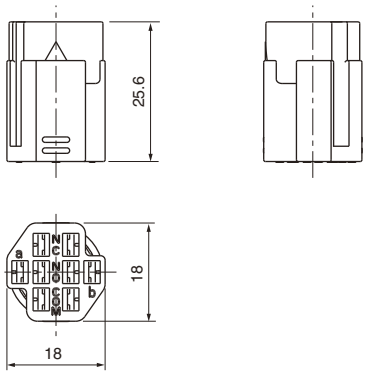

Type	Used with
AR6S692	Illuminated pushbutton switch, pushbutton switch, selector switch, pilot light

By combining with a switch, they can be used as a switch for PC board, connection type switch.
Note: • Dimensions when connected with a switch (pilot light) (unit: mm)

Standard type

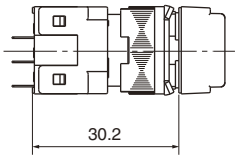

Thin type

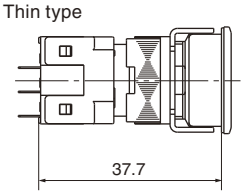

• PC board processing drawing (View from component side) (unit: mm)

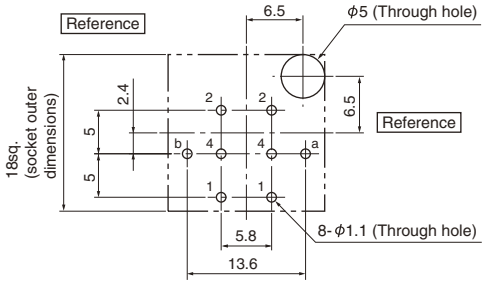

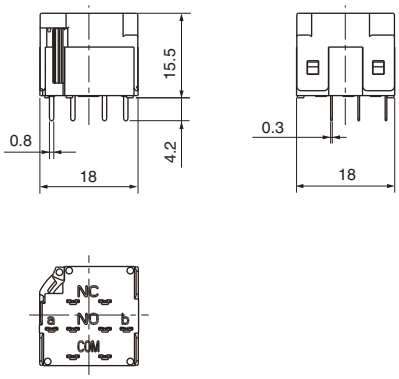

KKD07-306

AR16, DR16 and AF16, DF16
Accessories

Description	Type	Dimensions, mm
Wrench  KKD07-257	Type / Used with **AHX601** / AR16 and DR16 series AF16 and DF16 series When installing a Command Switch on a panel, this tool enables secure and firm tightening.	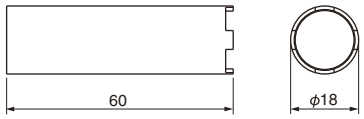
Remover (for Standard type)  KKD07-258	Type / Used with **AHX618** / Illuminated pushbutton switch, pushbutton switch, pilot light This tool is used for removing color lens, buttons or screens.	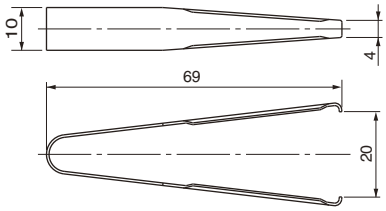
Lamp remover  Part A KKD07-259	Type / Used with **AHX672** / Illuminated pushbutton switch, pilot light This tool is used for installing or removing lamps. Use the part A to remove LED lamps.	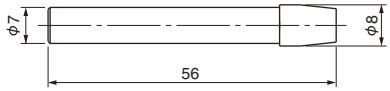
Panel plug (for Standard type)  KKD07-260  KKD07-261  KKD07-262  KKD07-267	Type / Used with **AXH645-□** / Rectangular type Degree of protection: IP40 **AXH644-□** / Square type Degree of protection: IP40 **AXH622-□** / Round type Degree of protection: IP40 **AXH850-B** [*1] / Rectangular type Degree of protection: IP65 [*1] Packing and nut are provided. The color is black only. Note: • Enter the color code in the square box □. Type: Black / Gray Code: **B** / **GY**	AHX645 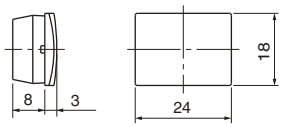 AHX644 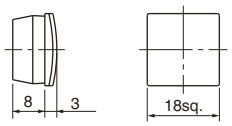 AHX622 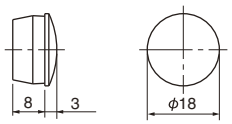 AHX850-B 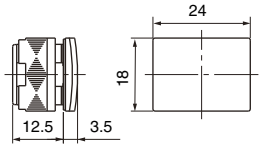
Panel plug (for Thin type)  KKD07-264  KKD07-266  KKD07-265  KKD07-263  KKD07-268  KKD07-269	Type / Used with **AF6Y645-B** / Rectangular type Degree of protection: IP40 **AF6Y644-B** / Square type Degree of protection: IP40 **AF6Y622-B** / Round type Degree of protection: IP40 **AF6Y850-B** [*1] / Rectangular type Degree of protection: IP65 **AF6Y851-B** [*1] / Square type Degree of protection: IP65 **AF6Y852-B** [*1] / Round type Degree of protection: IP65 [*1] Packing, panel retainer, and nut are provided. Note: • The color is black only.	AF6Y645-B 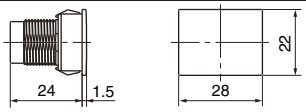 AF6Y644-B 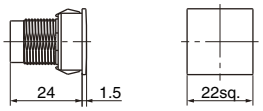 AF6Y622-B 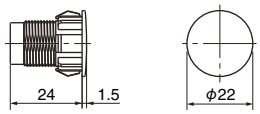 AF6Y850-B 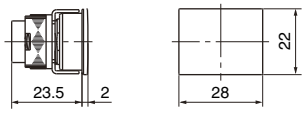 AF6Y851-B 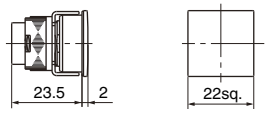 AF6Y852-B 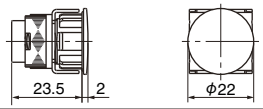

Description	Type	Dimensions, mm

Color lens and button

KKD07-270

Type	Used with
AR6C633-□	AR16F0N, F5N, F0T, F5T, G0N, G5N, G0T, G5T DR16F0N AF16F0N, F5N, F0T, F5T, Type DF16F0N
AR6C632-□	AR16F0M, F5M, F0S, F5S, Type DR16F0M AF16F0M, F5M, F0S, F5S, Type DF16F0M
AR6C631-□	AR16E0L, E5L, E0R, E5R, Type DR16E0L AF16F0L, F5L, F0R, F5R, Type DF16F0L
DR6C630-□	DR16D0L

Note: Enter the color code in the square box □.

Color	Green	Red	Transparent*	Yellow	Orange	Blue
Code	**G**	**R**	**C**	**Y**	**A**	**S**
Color code of main unit	G	R	W, B	Y	A	S

* When the color code of the main unit is W, a combination of the transparent lens and the white legend plate comes to white (except for dome type).
When it is B, a combination of the transparent lens and the black legend plate comes to black (except for pilot light).
When the dome type (DR16D0L)'s color code of the main unit is W, the lens code is W.

AR6C633

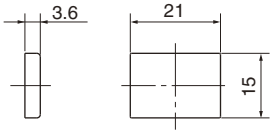

AR6C632

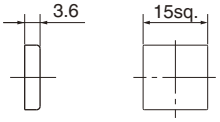

AR6C631

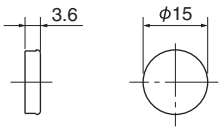

DR6C630

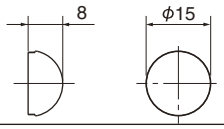

Legend plate

KKD07-272

Type	Used with
AR6P667-□	AR16F0N, F5N, F0T, F5T, G0N, G5N, G0T, G5T DR16F0N AF16F0N, F5N, F0T, F5T, Type DF16F0N
AR6P666-□	AR16F0M, F5M, F0S, F5S, Type DR16F0M AF16F0M, F5M, F0S, F5S, Type DF16F0M
AR6P665-□	AR16E0L, E5L, E0R, E5R, Type DR16E0L AF16F0L, F5L, F0R, F5R, Type DF16F0L

Note: Enter the color code in the square box □.

Type	White	Black
Code	**W**	**B**
Color code of main unit	G, R, W, Y, A, S	B

• When the color code of the main unit is W, a combination of the transparent lens and the white legend plate comes to white.
When it is B, a combination of the transparent lens and the black legend plate comes to black (except for pilot light).

AR6P667

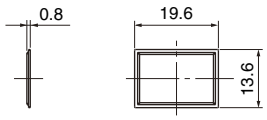

AR6P666

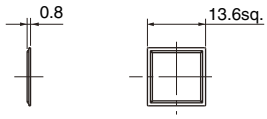

AR6P665

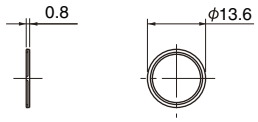

LED lamp

KKD07-273

Type	Lamp operational voltage, current consumption
DR6L695-A□	6V AC/DC, Green, Red, Amber, blue: 7.5mA AC, 7.5mA DC Orange: AC8.5mA, DC8.5mA, Yellow: 17mA AC, 17mA DC
DR6L695-B□	12V AC/DC, Green, Red, Amber, blue: 7.5mA AC, 7.5mA DC Orange, Yellow: 8.5mA AC, 8.5mA DC
DR6L695-E□	24V AC/DC, Green, Red, Amber, blue: 7.5mA AC, 7.5mA DC Orange, Yellow: 8.5mA AC, 8.5mA DC

Note: Enter the color code in the square box □.

Color	Green	Red	Orange	Yellow	Amber	Blue
Code	**G**	**R**	**W**	**Y**	**A**	**S**
Color code of main unit	G	R	W	Y	A	S

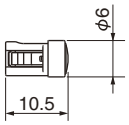

Key

KKD07-274

Type	Used with
AR6C662-□	AR16JT, JS, JR AF16JT, JS, JR

Note: • Enter the color code in the square box □.

Code (Key type)	**A**	**B**	**C**	**D**	**E**	**F**

• Two pieces per set on delivery.
• Both sides of the key is same.

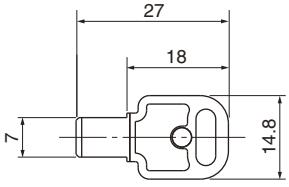

t: 2mm

AR16, DR16 and AF16, DF16
Mass

• Standard type <AR16, DR16 series>

1. Illuminated push button switches (g)

Type	Without transformer	
	SPDT	2PDT
AR16F0N	9.3	9.9
AR16F5N	9.3	9.9
AR16G0N	9.4	10
AR16G5N	9.4	10
AR16F0M	8.7	9.3
AR16F5M	8.7	9.3
AR16E0L	8.1	8.7
AR16E5L	8.1	8.7

2. Pushbutton switches (g)

Type	SPDT	2PDT
AR16F0T	8.5	9.1
AR16F5T	8.5	9.1
AR16G0T	8.7	9.3
AR16G5T	8.7	9.3
AR16F0S	8	8.6
AR16F5S	8	8.6
AR16E0R	7.4	8
AR16E5R	7.4	8

3. Pilot lights (g)

Type	Without transformer
DR16F0N	8.7
DR16F0M	8.1
DR16E0L	7.5
DR16D0L	7.5

4. Selector switches (knob type) (g)

Type	SPDT	2PDT
AR16PT	9.6	10.2
AR16PS	8.6	9.2
AR16PR	8.3	8.9

5. Selector switches (key type) (g)

Type	SPDT	2PDT
AR16JT	23.2	23.8
AR16JS	22.3	22.9
AR16JR	21.9	22.5

Note: The value when two keys are attached.

• Thin type <AF16, DF16 series>

1. Illuminated push button switches (g)

Type	Without transformer	
	SPDT	2PDT
AF16F0N	13.5	14.1
AF16F5N	13.5	14.1
AF16F0M	12.8	13.4
AF16F5M	12.8	13.4
AF16F0L	12	12.6
AF16F5L	12	12.6

2. Pushbutton switches (g)

Type	SPDT	2PDT
AF16F0T	12.7	13.3
AF16F5T	12.7	13.3
AF16F0S	12	12.6
AF16F5S	12	12.6
AF16F0R	11.3	11.9
AF16F5R	11.3	11.9

3. Pilot lights (g)

Type	Without transformer
DF16F0N	12.8
DF16F0M	12.1
DF16F0L	11.4

4. Selector switches (knob type) (g)

Type	SPDT	2PDT
AF16PT	14.2	14.8
AF16PS	13.7	14.3
AF16PR	13.1	13.7

5. Selector switches (key type) (g)

Type	SPDT	2PDT
AF16JT	27.8	28.4
AF16JS	27.3	27.9
AF16JR	26.8	27.4

Note: The value when two keys are attached.

⚠ Safety Considerations

- For safe operation, read the instruction manual or user manual that comes with the product carefully or consult the Fuji sales representative from whom you purchased the product, before using the products.
- Products introduced in this catalog have not been designed or manufactured for such applications in a system or equipment that will affect human bodies or lives.
- Customers, who want to use the products introduced in this catalog for special systems or devices such as for atomic-energy control, aerospace use, medical use, passenger vehicle, and traffic control, are requested to consult the Fuji sales division.
- Customers are requested to prepare safety measures when they apply the products introduced in this catalog to such systems or facilities that will affect human lives or cause severe damage to property if the products become faulty.
- For safe operation, wiring should be conducted only by qualified engineers who have sufficient technical knowledge about electrical work or wiring.

Fuji Electric FA Components & Systems Co., Ltd.

5-7, Nihonbashi Odemma-cho, Chuo-ku, Tokyo 103-0011, Japan

URL http://www.fujielectric.co.jp/fcs/eng

Printed on 100% recycled paper using soy-based ink

Printed in Japan 2007-9 T30 FIS AEH315