MITSUBISHI ELECTRIC

INVERTER

Changes for the Better

MODEL

FR-V500

Mitsubishi Electric Corporation Nagoya Works is a factory certified for ISO14001 (standards for environmental management systems) and ISO9001(standards for quality assurance managememt systems)

ISO 14001 JACO JAPAN AUDIT AND CERTIFICATION ORGANIZATION FOR ENVIRONMENT AND QUALITY

UKAS ENVIRONMENTAL MANAGEMENT 051

BVQI ISO 9001

UKAS QUALITY MANAGEMENT 008

The reliable "V" combining high performance and ease-of-use!

Loaded with new technology!

Adaptive flux observer

The motor flux is continuously updated using the motor current and the inverter output voltage.

The motor flux is calculated at high precision, improving torque accuracy.

Reduces torque fluctuation caused by changes in the motor temperature by using online tuning with the adaptive flux observer, high torque accuracy is realized regardless of changes in the motor temperature (Vector control with encoder).

Motor temperature - torque characteristics

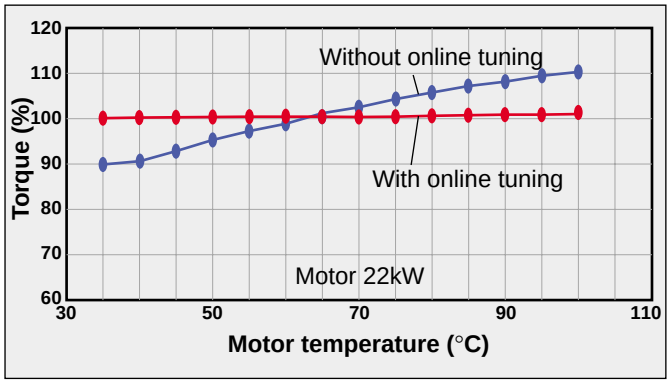

Improved torque accuracy makes, this product suitable for torque controlled applications such as winding machines, printing machines (tension control) and steel lines (helper control using speed-torque).

CONTENTS

Simple gain tuning

The motor's load inertia is estimated online, and the speed control gain and position loop gain are adjusted automatically.

Speed control gain and position loop gain adjustments are no longer necessary!

The motor's load inertia estimated automatically online from the output torque during acceleration/deceleration provides the optimum speed control gain and position loop gain. The software can set the optimum response automatically with the 15-steps responsiveness settings.

Comparison of speed accuracy before and after tuning

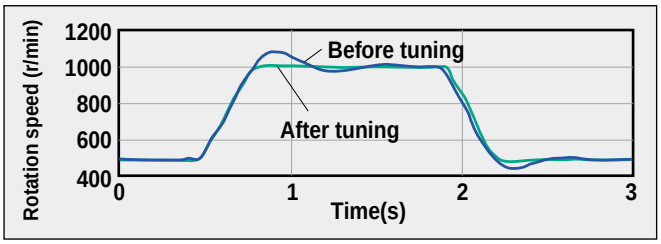

Automatic load inertia estimation characteristics

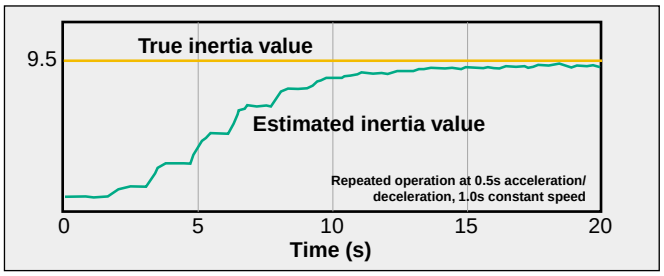

Tracking ability at impact load

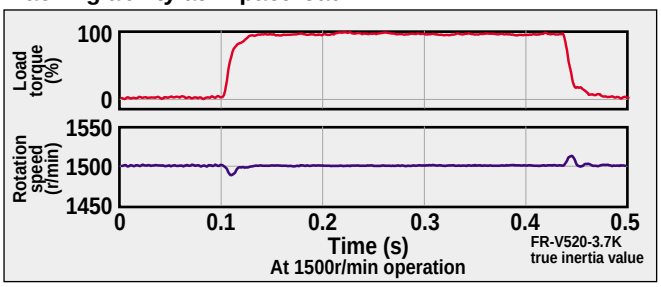

The speed control gain, position loop gain and load inertia are estimated automatically, eliminating bothersome adjustments of the gains by manual inputs. This function is suitable for cycle-operation applications in speed control and position control.

Ideal model adaptive speed control

High responsiveness with respect to the target speed value is realized by providing an ideal model adaptive speed control section in the control system. Vibrations are suppressed by reducing the error between the ideal model speed and actual speed with a disturbance suppression section.

Improve responsiveness of speed command by using in combination with simple gain tuning!

(Inverter internal speed response is 800rad/s, speed control range is 1:1500)
The response can be set independently for the ideal model's speed control section and the disturbance control section.

Speed response characteristics

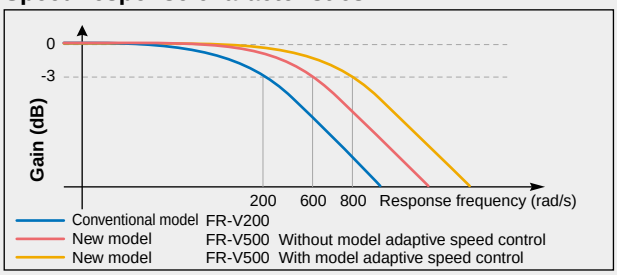

Suitable when there are noises in the analog command. In addition, by adjusting the speed responsiveness and the motor's disturbance torque individually, it is suitable for speed-controlled lifters or machines with a large load fluctuation.

Machine analyzer

Avoid resonance by measuring the machine's resonance point.

The motor is automatically accelerated and the resonance frequency in the machine system is analyzed by the setup software. Machine resonance can be avoided easily by combining the analysis results and notch filter function.

Example of machine analyzer screen

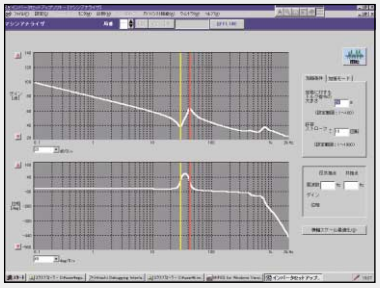

Improved rotation unevenness

Uneven rotation during low speeds has been greatly improved.

The unevenness has been suppressed to one-third the conventional level by incorporating the new ASIC with enhanced responsiveness.

Vector control without an encoder

Vector control without an encoder by controlling the motor excitation and torque currents separately.
Speed control and torque control are possible. (Available as a special product. Consult with Mitsubishi for details.)

Compatible with a wide range of motors

Encoder expandability

The Encoder power supply voltage can be set to 5.5V, 12V or 24V. (Differential line driver, complimentary)
The dedicated motor (SF-V5R) encoder has a 2048P/R resolution and is compatible with the 12V power supply voltage.

New functions

Position control by contact inputs

By setting the feed pulse rate in advance, position control is possible by ON/OFF of the contact signals. Options are not required and up to 15 positions can be set.

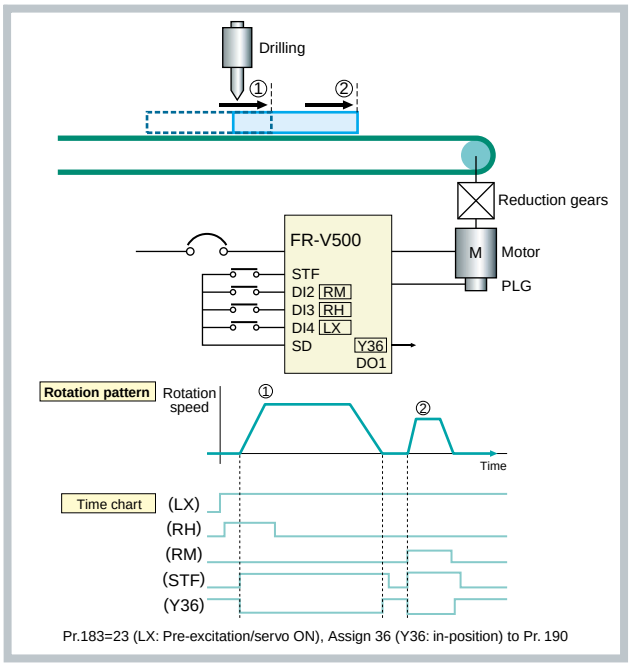

Feed forward control

The motor responsiveness to changes in the speed command is improved. This is suitable for improving responsiveness to acceleration and deceleration.

Compatible with 16-bit high resolution analog input (FR-V5AX) and 16-bit digital input (FR-V5AH) built-in options

Operation at higher accuracies is possible.

Minimum setting resolution for speed command is 0.1r/min.

Brake transistor built in for 15kW and smaller capacities
Brake resistor also built in for 5.5kW and smaller capacities

Remote output function

The output signal can be turned ON/OFF like a PLC's remote output.
Example: ON/OFF of the pilot lamp, etc.

Master-slave function (analog type)

Synchronous speed operation is possible by inputting the information from the master inverter to the slave inverter.

Compatible with power regeneration common converter (FR-CV).

Complete network compliance

Compatible with SSCNET (FR-V5NS)

Up to eight axes can be connected and controlled in a batch using SSCNET, a highly reliable system with reduced wiring. SSCNET uses the high-speed synchronous serial communication method, and is optimal for synchronous operation.

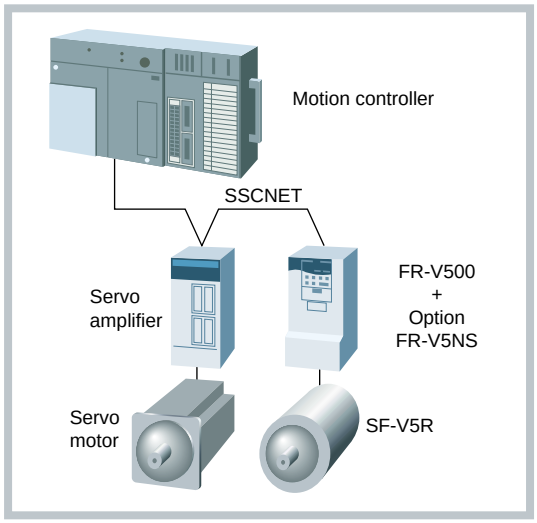

Compatible with CC-Link using optional (FR-A5NC)

Compatible with Ethernet (FR-V5NE)

To support the setup of the inverter, monitoring from the office is possible over LAN.

Compatible with other open networks using communication option

(RS-485, DeviceNet ™, Profibus-DP, Modbus Plus)

* DeviceNet™, Profibus-DP, Modbus Plus, Ethernet and CC-Link are trademarks or registered trademarks of the respective corporations or groups.

Improved operability and maintainability

- **Removable control terminal**
- **Easy replacement of the cooling fan.**
  (Fan's life is further extended with ON/OFF control)
- **FR-DU04-1 operation panel is standard on all models.**
- **Setup software (option) to support all operations from inverter setup to maintenance with RS-485.**
- **Data, such as output current, can be saved on the trace card (option) when an inverter error occurs. This data can be read out and analyzed with the setup software.**
- **A maintenance output function is available. This is a signal output function that notifies when the inverter's cumulative power ON time has passed a set time.**
- **The main circuit capacitor's life has been extended. Design life is 10 years (87,600 hours).**
  (Note) Ambient temperature: average 40°C
  Output current: Equivalent to Mitsubishi dedicated motor (4P) rated current
- **Improved maintainability of dedicated motor (SF-V5R).**
  The cooling fan's lead wires are stored in the terminal box making wiring work much easier.
- **Dedicated motor cooling fan compatible with 400V.**
  The power supply for the cooling fan used with the 11kW and higher capacity 400V class dedicated motor is compatible with 3-phase 400V, so a separate power supply is not required.

Replacement of cooling fan

Removable control terminal

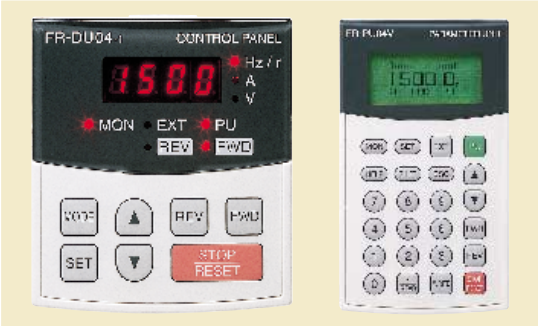

Operation panel FR-DU04-1 FR-PU04V

Environmental conformance

- **Soft-PWM control reduces the motor metalic sound at low carrier frequency.**
  RFI noise is lower compared to high carrier frequency.
- **The compact and lightweight DC reactor (DCL) can be connected to all capacities.**
- **Connection to a high-power factor converter (FR-HC) is possible.**

Global compliance

- **Compatible with UL, cUL and EN (Low Voltage Directive) Standards**
  Based on agreements made between UL and CSA, the cUL Standard approved parts are deemed to be equivalent to CSA Standard approved parts.
  The vector inverter is compatible with the standard specifications. (Compliance of the SF-V5R will be available soon. Consult with Mitsubishi for details.)
- **Compatible with 240V (15kW and smaller) and 480V (all capacities) power supply as a standard.**
- **Input/output terminal logic (sink/source) selectable**
- **Optional parameter unit (FR-PU04V) compatible with eight languages**
  Compatible languages: Japanese, English, German, French, Spanish, Italian, Swedish, Finnish

Model Configuration

Vector inverter

Type

FR–V 5 [2] 0 – [5.5K]

Symbol	Voltage
2	200V class
4	400V class

Symbol	Inverter capacity
1.5K to 55K	Indicates capacity (kW)

Model configuration

● : Marketed model

Power specifications	Inverter type	1.5K	2.2K	3.7K	5.5K	7.5K	11K	15K	18.5K	22K	30K	37K	45K	55K
3-phase 200V	FR–V520–□□	●	●	●	●	●	●	●	●	●	●	●	●	●
3-phase 400V	FR–V540–□□	●	●	●	●	●	●	●	●	●	●	●	●	●

Motor

Dedicated motor

SF–V5R [F] [H] [5K] [1] [B] [A]

Symbol	Structure
None	With legs
F	Flange type

Symbol	Structure
None	200V class
H	400V class

Symbol	Output (kW)	Symbol	Output (kW)
1K	1.5	18K	18.5
2K	2.2	22K	22
3K	3.7	30k	30
5K	5.5	37K	37
7K	7.5	45K	45
11K	11	55k	55
15K	15		

Symbol	Provided
None	With thermal protector
A	With thermistor

Symbol	Magnetic brakes
None	None
B	Provided

Symbol	Rated rotation speed (r/min)
None	1500
1	1000

Motor variation list

Rated rotation speed : 1500r/min (4 pole)

●: Marketed model — : Not available

Model	Basic type	Rated output (kW)												
		1.5	2.2	3.7	5.5	7.5	11	15	18.5	22	30	37	45	55
standard legs	SF-V5R□	●	●	●	●	●	●	●	●	●	●	●	●	●
Flange type	SF-V5RF□	●	●	●	●	●	●	●	●	●	●	●	●	—

Note
1. 6 pole (1000r/min rated speed) models are available, please contact your Mitsubishi sales office for detail.
2. Models with brakes and with flanges and brakes are available, please contact your Mitsubishi sales office.

Standard specifications

200V class Dedicated motor [SF-V5R (1500r/min Series)]

		Type	1.5	2.2	3.7	5.5	7.5	11	15	18.5	22	30	37	45	55
Inverter		Applicable motor capacity (kW)	1.5	2.2	3.7	5.5	7.5	11	15	18.5	22	30	37	45	55
	Output	Rated capacity (kVA) (Note 5)	3.1	4.5	6.9	9.8	13.0	18.7	25.2	30.4	35.8	43.8	58.1	68.5	91.0
	Output	Rated current (A)	9.0	13.0	20.0	28.5	37.5	54	72.8	88	103.5	126.5	168	198	264
	Output	Overload current rating (Note 1)	150% for 60 seconds, 200% for 0.5 seconds (inverse time characteristics)												
	Output	Regenerative braking torque / Maximum permissible duty	100% torque 3% ED (Note 2) (Note 8)			100% torque 2% ED (Note 2) (Note 8)	20% torque continuous (Note 8)								
	Power supply	Rated input AC voltage/ frequency	3-phase 200 to 220V 50Hz, 200 to 240V 60Hz							3-phase 200 to 220V 50Hz, 200 to 230V 60Hz					
	Power supply	Permissible AC voltage fluctuation	170 to 242V 50Hz, 170 to 264V 60Hz							170 to 242V 50Hz, 170 to 253V 60Hz					
	Power supply	Permissible frequency fluctuation	±5%												
	Power supply	Instantaneous voltage drop withstand level	Operation continues at 165V or more. If the voltage drops to less than 165V from the rated voltage, operation continues for 15ms.												
	Power supply	Power facility capacity (kVA) (Note 3)	5.0	6.5	10	14	19	23	33	39	48	57	77	90	123
		Protective structure (JEM 1030)	Enclosed type (IP20 NEMA1) (Note 4)							Open Type (IP00)					
		Cooling method	Forced cooling												
		Approximate weight (kg)	3.5	3.5	6.0	6.0	6.0	14.0	14.0	21.0	30.0	40.0	40.0	55.0	58.0
Dedicated motor		Motor type	SF-V5R 1K	SF-V5R 2K	SF-V5R 3K	SF-V5R 5K	SF-V5R 7K	SF-V5R 11K	SF-V5R 15K	SF-V5R 18K	SF-V5R 22K	SF-V5R 30K	SF-V5R 37K	SF-V5R 45K	SF-V5R 55K
		Rated output (kW)	1.5	2.2	3.7	5.5	7.5	11	15	18.5	22	30	37	45	55
		Rated torque (N·m)	9.55	14.1	23.6	35.0	47.7	70.0	95.5	118	140	191	235	286	350
		Maximum torque 150% for 60 sec. (N·m)	14.3	21.1	35.4	52.4	71.6	105	143	176	211	287	353	429	525
		Rated speed (r/min)	1500												
		Maximum speed (r/min)	3000 (Note 7)												2400
		Frame No.	90L	100L	112M	132S	132M	160M	160L	180M	180M	200L	200L	200L	225S
		J moment of inertia ($X10^{-4}$kg·m²)	67.5	105	175	275	400	750	875	1725	1875	3250	3625	3625	6850
		Cooling fan: Voltage	Single-phase 200V/50Hz 200V/60Hz (Note 10)			Single-phase 200V/50Hz 200 to 230V/60Hz		3-phase 200V/50Hz 3-phase 200 to 230V/60Hz							
		Cooling fan: Input (Note 9)	36/31W (0.26/0.22A)			34/28W (0.17/0.13A)		55/71W (0.39/0.39A)				100/156W (0.47/0.53A)			85/130W (0.46/0.52A)
		Ambient temperature and humidity	-10 to +40°C (with no freezing) 90%RH or less (with no dew condensation)												
		Structure	Totally enclosed forced ventilation method												
		Detector	PLG2048P/R A phase, B phase, Z phase +12VDC power												
		Accessories	PLG, thermal protector, fan												
		Insulation	Class F												
		Vibration class	V10												
		Approx. weight (kg)	24	33	41	52	62	99	113	138	160	238	255	255	320

Note

1. The overload current rating percentage indicates the percentage with respect to the inverter's rated output current. For repeated duty, allow time for the inverter and motor to return to or below the temperatures under 100% load.
2. The short-time rating is 5s.
3. The power capacity will change according to the power side impedance (including the input reactor and power) value.
4. When the wiring cover for options is removed and built-in options are mounted, the protective structure will be open (IP00).
5. The rated output capacity is 200V when the output voltage is 200V class.
6. Even if the motor is one rank lower than the inverter capacity, use is possible by setting Pr. 80: motor capacity and Pr. 81: No. of poles. Other brands and dedicated motors can be used by carrying out offline automatic tuning.
7. The 3.7kW or smaller dedicated motor can be run at the maximum speed of 3600r/min. Contact your Mitsubishi sales office for details.
8. By connecting the dedicated external brake resistor (FR-ABR) option, the 1.5kW to 7.5kW capacities will have a 100% torque and 10%ED, and the 11kW and 15kW capacities will have a 100% torque and 6%ED.
9. This is the power (current) for 50Hz/60Hz.
10. The power fluctuation range is 200V±10%.

Standard specifications

400V class Dedicated motor [SF-V5R (1500r/min Series)]

		Type	1.5	2.2	3.7	5.5	7.5	11	15	18.5	22	30	37	45	55
Inverter		Applicable motor capacity (kW)	1.5	2.2	3.7	5.5	7.5	11	15	18.5	22	30	37	45	55
Inverter	Output	Rated capacity (kVA) (Note 5)	3.1	4.5	6.9	10.0	12.8	19.0	24.6	30.4	35.8	46.3	59.5	68.5	91.0
Inverter	Output	Rated current (A)	4.5	6.5	10.0	14.5	18.5	27.5	35.5	44	51.8	67	86	99	132
Inverter	Output	Overload current rating (Note 1)	150% for 60 seconds, 200% for 0.5 seconds (inverse time characteristics)												
Inverter	Output	Regenerative braking torque / Maximum permissible duty	100% torque 2% ED (Note 2) (Note 8)				20% torque continuous (Note 8)								
Inverter	Power supply	Rated input AC voltage/ frequency	3-phase 380 to 480V 50Hz/60Hz												
Inverter	Power supply	Permissible AC voltage fluctuation	323 to 528V 50Hz/60Hz												
Inverter	Power supply	Permissible frequency fluctuation	±5%												
Inverter	Power supply	Instantaneous voltage drop withstand level	Operation continues at 330V or more. If the voltage drops to less than 330V from the rated voltage, operation continues for 15ms.												
Inverter	Power supply	Power facility capacity (kVA) (Note 3)	5.0	6.5	10	14	19	23	33	39	48	57	77	90	123
Inverter		Protective structure (JEM 1030)	Enclosed type (IP20 NEMA1) (Note 4)							Open Type (IP00)					
Inverter		Cooling method	Forced cooling												
Inverter		Approximate weight (kg)	3.5	3.5	6.0	6.0	14.0	14.0	14.0	14.0	24.0	35.0	35.0	50.0	52.0
Dedicated motor		Motor type	SF-V5R H1K	SF-V5R H2K	SF-V5R H3K	SF-V5R H5K	SF-V5R H7K	SF-V5R H11K	SF-V5R H15K	SF-V5R H18K	SF-V5R H22K	SF-V5R H30K	SF-V5R H37K	SF-V5R H45K	SF-V5R H55K
Dedicated motor		Rated output (kW)	1.5	2.2	3.7	5.5	7.5	11	15	18.5	22	30	37	45	55
Dedicated motor		Rated torque (N·m)	9.55	14.1	23.6	35.0	47.7	70.0	95.5	118	140	191	235	286	350
Dedicated motor		Maximum torque 150% for 60 sec. (N·m)	14.3	21.1	35.4	52.4	71.6	105	143	176	211	287	353	429	525
Dedicated motor		Rated speed (r/min)	1500												
Dedicated motor		Maximum speed (r/min)	3000 (Note 7)												2400
Dedicated motor		Frame No.	90L	100L	112M	132S	132M	160M	160L	180M	180M	200L	200L	200L	225S
Dedicated motor		J moment of inertia ($X10^{-4}$kg·m^2)	67.5	105	175	275	400	750	875	1725	1875	3250	3625	3625	6850
Dedicated motor	Cooling fan	Voltage	Single-phase 200V/50Hz 200V/60Hz (Note 10)			Single-phase 200V/50Hz 200 to 230V/60Hz		3-phase 400V/50Hz 3-phase 400 to 460V/60Hz							
Dedicated motor	Cooling fan	Input (Note 9)	36/31W (0.26/0.22A)			34/28W (0.17/0.13A)		55/73W (0.19/0.19A)				100/156W (0.27/0.30A)			85/130W (0.23/0.26A)
Dedicated motor		Ambient temperature and humidity	-10 to +40°C (with no freezing) 90%RH or less (with no dew condensation)												
Dedicated motor		Structure	Totally enclosed forced ventilation method												
Dedicated motor		Detector	PLG2048P/R A phase, B phase, Z phase +12VDC power												
Dedicated motor		Accessories	PLG, thermal protector, fan												
Dedicated motor		Insulation	Class F												
Dedicated motor		Vibration class	V10												
Dedicated motor		Approx. weight (kg)	24	33	41	52	62	99	113	138	160	238	255	255	320

Note

1. The overload current rating percentage indicates the percentage with respect to the inverter's rated output current. For repeated duty, allow time for the inverter and motor to return to or below the temperatures under 100% load.
2. The short-time rating is 5s.
3. The power capacity will change according to the power side impedance (including the input reactor and power) value.
4. When the wiring cover for options is removed and built-in options are mounted, the protective structure will be open (IP00).
5. The rated output capacity is 400V when the output voltage is 400V class.
6. Even if the motor is one rank lower than the inverter capacity, use is possible by setting Pr. 80: motor capacity and Pr. 81: No. of poles. Other brands and dedicated motors can be used by carrying out offline automatic tuning.
7. The 3.7kW or smaller dedicated motor can be run at the maximum speed of 3600r/min. Contact your Mitsubishi sales office for details.
8. By connecting the dedicated external brake resistor (FR-ABR) option, the 1.5kW to 7.5kW capacities will have a 100% torque and 10%ED, and the 11kW and 15kW capacities will have a 100% torque and 6%ED.
9. This is the power (current) for 50Hz/60Hz.
10. The power fluctuation range is 200V±10%.

Common specifications

Dedicated motor	Control specifications	Control method	Select from Soft-PWM control or high carrier frequency sine wave PWM control; Select from vector control or V/F control
		Control mode	Speed control, torque control, position control
		Speed setting resolution – Analog input	0.03% of maximum speed setting
		Speed setting resolution – Digital input	0.003% with respect to maximum setting (minimum setting 0.1r/min)
		Acceleration/deceleration time	0 to 3600 sec. (0.1sec. pitch)
		Acceleration/deceleration pattern	Select from linear, S-pattern (three types) or backlash countermeasure acceleration/deceleration
		Torque limit value	Torque limit value can be set (between 0 and 400%)
		Speed response	800rad/s (model adaptive speed control provided) (300rad/s at analog input)
		Speed control range	1:1500
		Speed accuracy	Within ±0.01% of maximum rotation speed/during digital input
		Repeatable torque accuracy	±5% (adaptive flux observer provided)
	Input signals	Analog setting signal	

Terminal No.	Setting range	Speed control	Torque control
2	0 to 10V Resolution (0.03%)	Main speed setting	Speed limit
1	0 to ±10V Resolution (0.05%)	Auxiliary speed setting/flux command/regenerative torque limit	Speed limit compensation/ flux command/ Forward/reverse run speed limit (analog polarity changeover speed limit)
3	0 to ±10V Resolution (0.05%)	Torque limit/torque bias	Torque command
6 (Option (FR-V5AX))	0 to ±10V Resolution (0.003%)	Main speed setting (terminal 2 is invalid)/Torque limit	Speed limit (terminal 2 is invalid)/ Torque command (terminal 3 is invalid)

Input signals	Digital input signal option (FR-V5AH)	16-bit digital input (speed can be set with BCD or binary codes)	
	Contact signals	Fixed function terminals: 3 points	Forward run command, error reset, external thermal
	Contact signals	Function terminals: 5 points	Select from reverse run command, multi-speed setting (max. 15 speeds), remote setting, JOG operation (Note 1) 2nd function selection, 3rd function selection, output stop, start signal self-hold, pre-excitation, control mode changeover, torque limit selection, S-pattern changeover, PID control terminal, orientation command, brake release complete signal, PU operation/external operation changeover, torque bias selection 1, 2, P control selection, servo ON, HC connection, PU/internal interlock, external DC braking start
	Contact signals – Option (FR-V5AX)	Multi-function terminal: 6 points	
Output signals	Contact signals	IC contact(AC230V 0.3A,DC30V 0.3A)	Select from inverter 1, 2, running, speed reached, instantaneous power failure (undervoltage) speed detection, 2nd speed detection, 3rd speed detection, PU operation mode, overload warning, regenerative brake pre-alarm, electronic thermal pre-alarm, output current detection, zero current detection PID lower limit, PID upper limit, PID forward/reverse run output, READY, READY2, brake release request, fan fault output, fin overheat pre-alarm, orientation complete, output during forward run, output during reverse run, low-speed output, torque detection, regeneration status output, minor fault output 1, 2, error output, maintenance timer output, remote output, speed detection, in-position, trace state
	Open collector signal	Multi-function terminal: 3 points	
	Open collector signal – Option (FR-V5AY)	Multi-function terminal: 3 points	
	Open collector signal – Option (FR-V5AM)	Multi-function terminal: 1 points	
	Open collector signal – Option (FR-A5AY)	Multi-function terminal: 7 points	
	Analog output	0 to ±10V 12 bits x 1 CH 0 to 10V 12 bits x 1 CH	Select from rotation speed, output current output voltage, set speed, output frequency, motor torque, converter output voltage, regenerative brake duty, electronic thermal load rate, output current peak value, converter output voltage peak value, load meter, motor exciting current, motor output, reference voltage output, torque command, torque current command, torque motor
	Analog output – Option (FR-A5AY)	0 to 10V 10 bits x 1 CH 0 to 20mA 10 bits x 1 CH	
	PLG output Option (FR-V5AY)	A phase, B phase, Z phase (A phase and B phase can be divided) Select open collector or differential line driver	
	Operation functions	Upper/lower limit speed setting, speed jump, external thermal input selection, polarity reversed operation, override function, restart after instantaneous power failure, forward/reverse run prevention, operation mode selection, offline automatic tuning function online automatic tuning function, simple gain tuning, computer link operation, remote setting, brake sequence, 2nd function, 3rd function, multi-speed operation, coast to stop, power failure stop, PID control, speed feed forward, model adaptive speed control, master, slave, torque bias, 12-bit digital command (option FR-A5AX), 16-bit digital command (option FR-V5AH), pulse train input (option FR-A5AP), motor thermistor interface (option FR-V5AX)	
	Display	Parameter unit (FR-DU04-1/FR-PU04V)	Select from rotation speed, output current output voltage, set speed, output frequency, motor torque, converter output voltage, regenerative brake duty, electronic thermal load, output current peak value, converter output voltage peak value, input terminal state (Note 4), output terminal state (Note 4), load meter, motor exciting current, position pulse, cumulative power ON time, actual operation time, motor load rate, torque command, torque current command, feedback pulse, motor output, trace state
	Display	Error details	The details of the error appear when the protection function operations, and up to eight past errors are saved. (Only four errors are displayed on operation.)
	Protective functions		Overcurrent shut-off (during acceleration, deceleration, and constant speed), regenerative overvoltage shut-off (during acceleration, deceleration, and constant speed), overvoltage, instantaneous power failure, overload shut-off (electronic thermal), brake transistor error (Note 2), ground fault overcurrent power output short-circuit (12VDC/24VDC/operation panel), stall prevention, external thermal, fin overheating, fan fault, option error, parameter error, PU disconnection, encoder no signal, excessive speed detection, excessive position error, CPU error, output phase failure, No. of retries exceeded, brake sequence error, encoder phase error
	Environment	Ambient temperature	–10 to +50°C (non-freezing)
	Environment	Ambient humidity	90%RH or less (with no dew condensation)
	Environment	Storage temperature (Note 4)	–20 to +65°C
	Environment	Atmosphere	Indoors (with no corrosive gases, flammable gases, oil mist or dust)
	Environment	Altitude and vibration	1000m or less above sea level, 5.9m/s^2 or less (JIS C 0040 compliant)

Notes
1. JOG operation is also possible with the operation panel or parameter unit (FR-PU04V).
2. This is not mounted on the FR-V520-18.5K to 55K capacities which do not have a built-in brake circuit.
3. This is the temperature to which units can be exposed for a short time, such as during transportation.
4. This is not provided with the operation panel (FR-DU04-1).

Inverter dimension drawings (unit: mm)

FR-V520-1.5K, 2.2K
FR-V540-1.5K, 2.2K

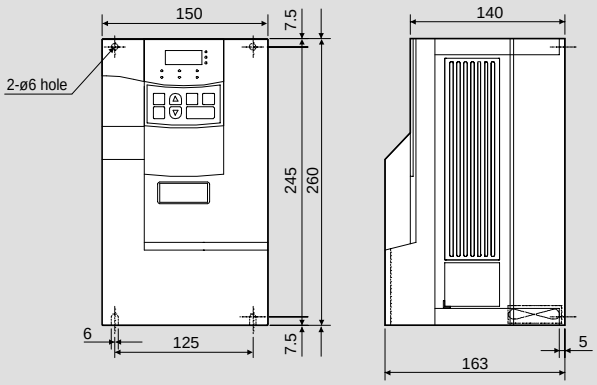

FR-V520-3.7K, 5.5K, 7.5K
FR-V540-3.7K, 5.5K

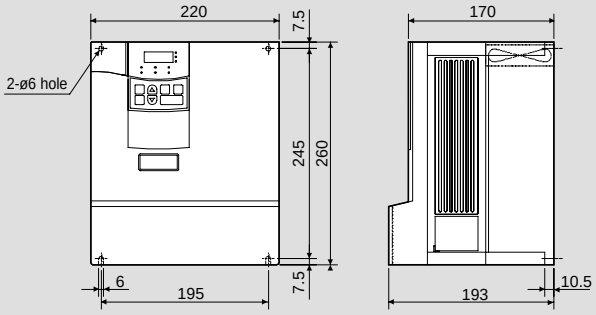

FR-V520-11K, 15K
FR-V540-7.5K, 11K, 15K, 18.5K

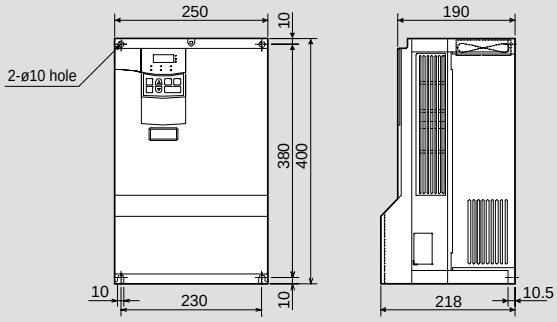

FR-V520-18.5K

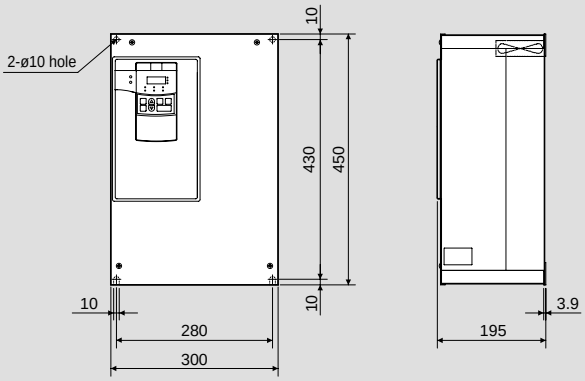

Inverter dimension drawings (unit: mm)

FR-V520-22K,30K,37K
FR-V540-22K,30K,37K

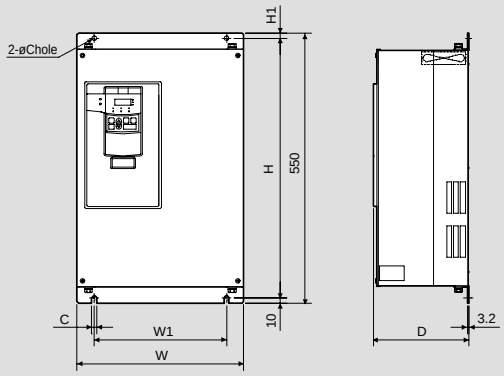

Inverter type	W	W1	H	H1	D	C
FR-V520-22K FR-V540-22K	340	270	530	10	195	10
FR-V520-30K,37K FR-V540-30K,37K	450	380	525	15	250	12

FR-V520-45K, 55K
FR-V540-45K, 55K

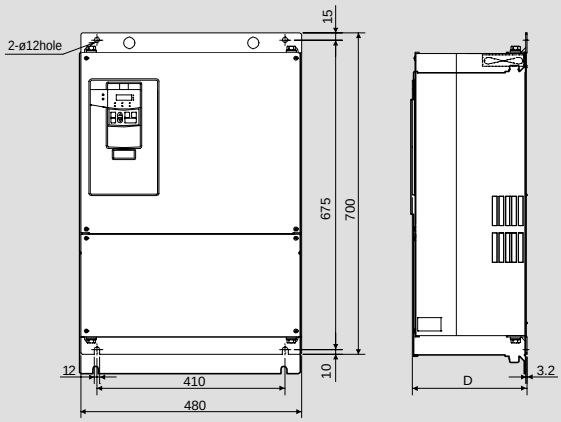

Inverter type	D
FR-V520-45K FR-V540-45K	250
FR-V520-55K FR-V540-55K	270

Dedicated motor dimension drawings (1500r/min Series)

SF-V5R 1K

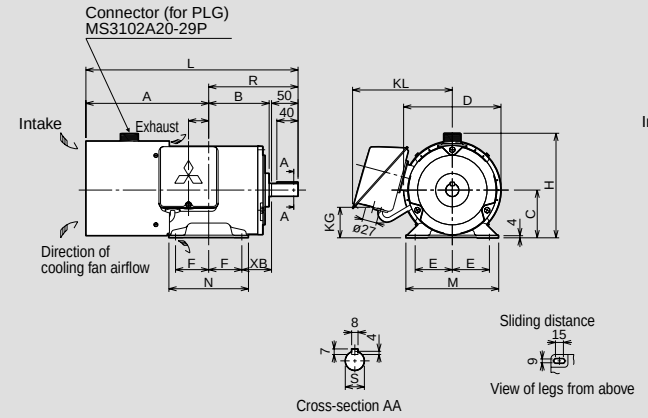

SF-V5R 2K, 3K, 5K, 7K

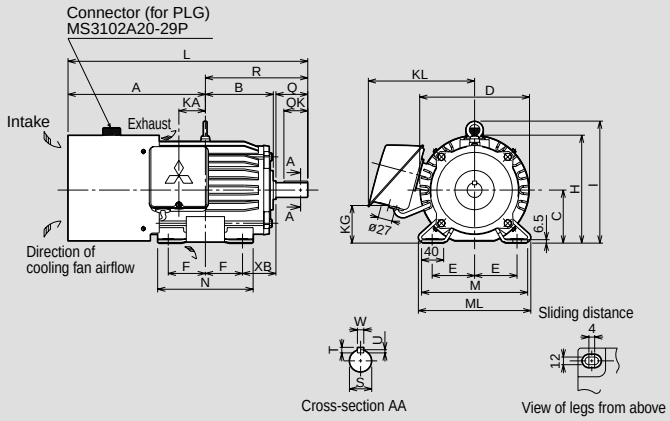

SF-V5R 11K, 15K, 18K, 22K

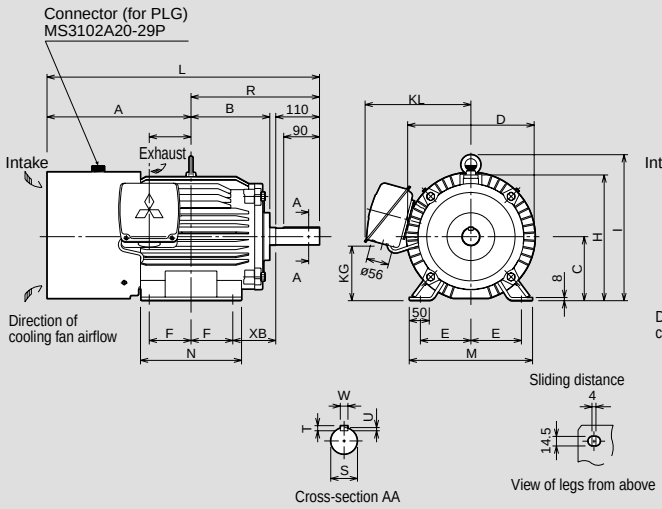

SF-V5R 30K, 37K, 45K, 55K

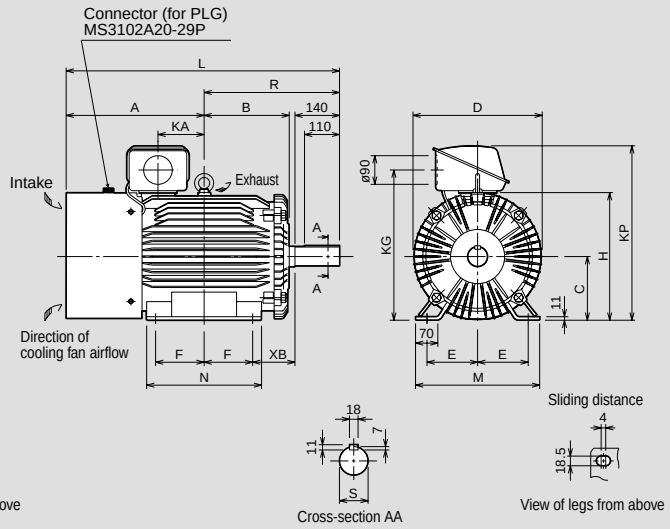

Dimensions table

Type	Frame No.	Weight (kg)	Motor																					
			A	B	C(Note 4)	D	E	F	H	I	KA	KG	KL/KP	L	M	ML	N	XB	Q	QK	R	S	T	U	W
SF-V5R(H)1K	90L	24	231.5	114	90	183.6	70	62.5	198	—	38	58	188	400	175	—	150	56	—	—	168.5	24j6	—	—	—
SF-V5R(H)2K	100L	33	259	128	100	207	80	70	203.5	230	50	71	200	452	200	212	180	63	60	45	193	28j6	7	4	8
SF-V5R(H)3K	112M	41	253	135	112	228	95	70	226	253	54	86	211	453	230	242	180	70	60	45	200	28j6	7	4	8
SF-V5R(H)5K	132S	52	278	152	132	266	108	70	265	288	60	110	225	517	256	268	180	89	80	63	239	38k6	8	5	10
SF-V5R(H)7K	132M	62	297	171	132	266	108	89	265	288	79	110	225	555	256	268	218	89	80	63	258	38k6	8	5	10
SF-V5R(H)11K	160M	99	362	198	160	318	127	105	316	367	105	142	266	685	310	—	254	108	—	—	323	42k6	8	5	12
SF-V5R(H)15K	160L	113	384	220	160	318	127	127	316	367	127	142	266	729	310	—	298	108	—	—	345	42k6	8	5	12
SF-V5R(H)18K/22K	180M	138/160	388.5	225.5	180	363	139.5	120.5	359	410	127	168	289	740	335	—	285	121	—	—	351.5	48k6	9	5.5	14
SF-V5R(H)30K/37K,45K	200L	238/255	433.5	267.5	200	406	159	152.5	401	—	145	472	548	859	390	—	361	133	—	—	425.5	60m6	—	—	—
SF-V5R(H)55K	225S	320	450	277	225	446	178	143	446	—	145	517	593	882	428	—	342	149	—	—	432	65m6	—	—	—

Note

1. Install the motor on the floor so that the shaft is horizontal.
2. Provide a sufficient clearance with the fan intake port, and make sure that the openings are not obstructed.Confirm that the airflow from the fan flows in the directions as shown in the diagrams.
3. When using the flange type or the type with brakes, please request for separate outline dimension drawings.
4. The shaft center height C's vertical dimension tolerance is 0-0.5.
5. The main models are shown in the outline dimension drawings. The appearance may differ slightly depending on the frame size.
6. "H" is added for the 400V Class models.

Dedicated motor 1000r/min (6 pole) frame No.

Contact your Mitsubishi sales office when using a 1000r/min model.

Rated output (kW)	1.5	2.2	3.7	5.5	7.5	11	15	18.5	22	30	37
Frame No.	100L	112M	132S	132M	160M	160L	180M	200L	200L	200L	225S

Operation panel

FR-DU04 -1

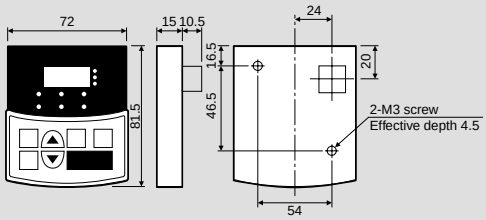

Select screws that does not exceed the effective depth.

● Cut-out dimensions

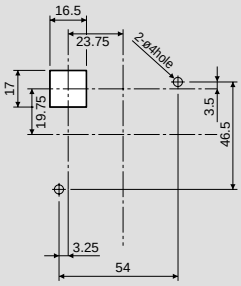

Parameter unit (option)

FR-PU04V

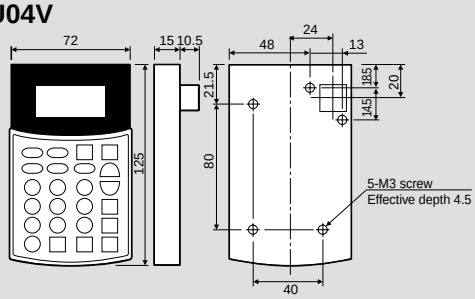

Select screws that does not exceed the effective depth.

● Cut-out dimensions

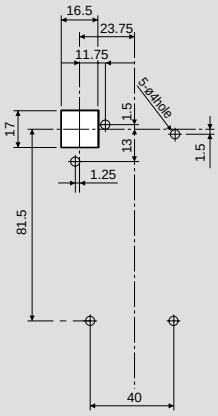

● Cut-out dimensions

PU connector pin layout

View from front of inverter body (receptacle side)

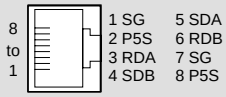

Notes

1. Do not connect to a computer's LAN board, FAX/modem socket or telephone's modular jack. The product could be damaged as the electrical specifications differ.
2. The No. 2 and 3 pins (P5S) are the power supply for the operation panel and parameter unit. Do not use these when carrying out RS-485.

Torque characteristics

Dedicated motor (SF-V5R)

Torque characteristics when the inverter of the same capacities are combined and at the rated voltage.

1500r/min torque reference

1.5 to 22 [kW]

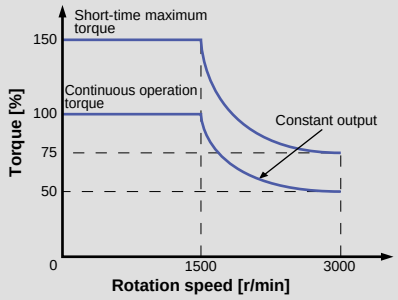

30 to 55 [kW]

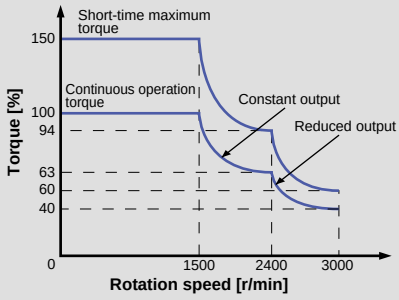

Note
1. The maximum speed for the 1.5kW capacity is 2400r/min.
2. The 3.7kW and smaller capacity dedicated motor can be operated at the maximum rotation speed 3600r/min. Contact your Mitsubishi sales office for details.
3. The maximum rotation speed for the motor with brakes is 1800r/min.

Terminal connection diagram

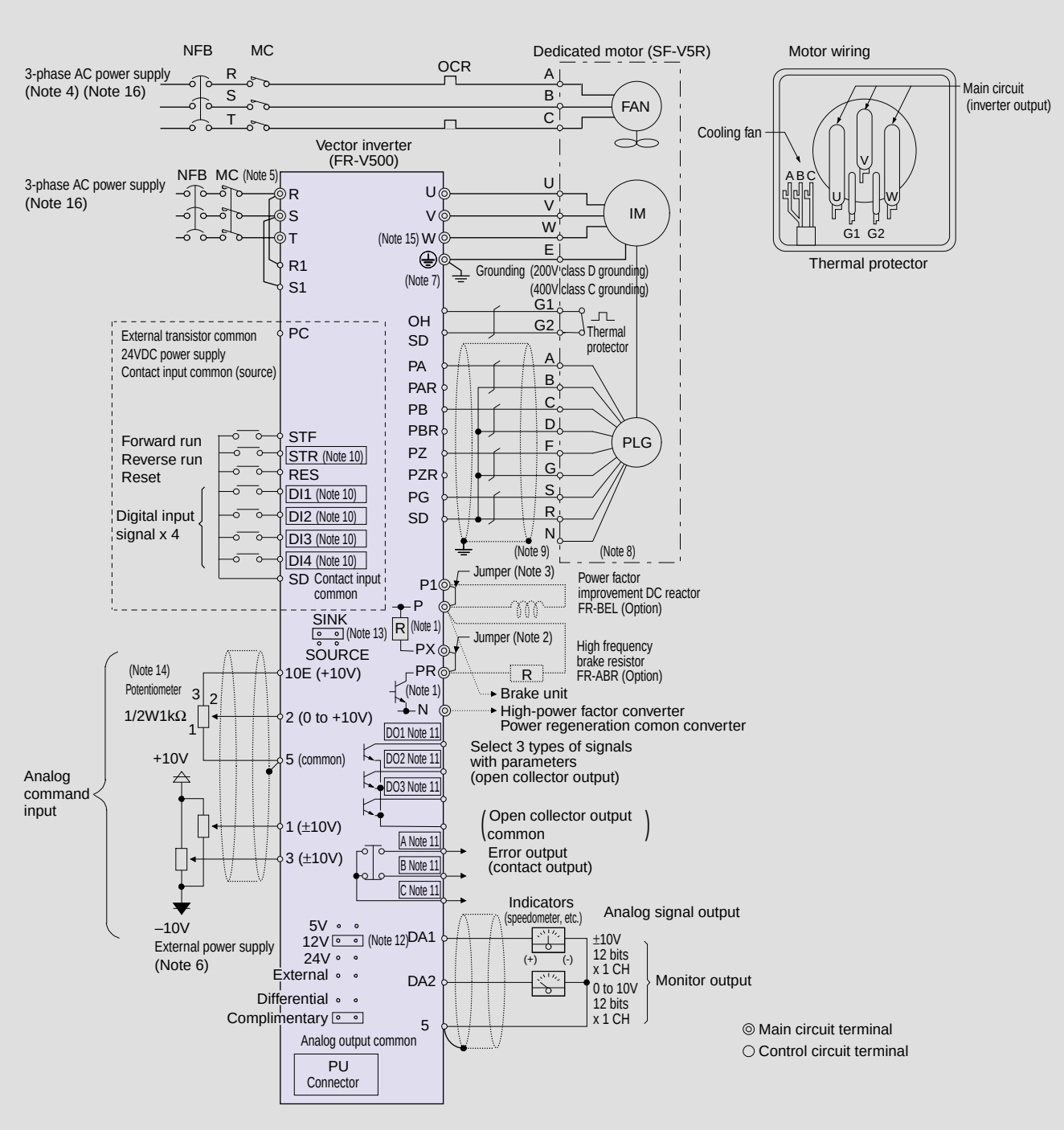

Note

1. Terminal PR is mounted on the 15K and smaller capacities, and terminal PX is mounted on the 5.5K and smaller capacities.
2. When using FR-ABR with the 5.5kW or smaller capacity, remove this Jumper.
3. Remove this Jumper when using FR-BEL.
4. The fan power is a single-phase power for the 7.5kW or smaller dedicated motors.
5. The inverter's life will shortened by repeated in-rush currents when the power is turned ON, so do not turn the power ON and OFF frequently.
6. Prepare a ±10V external power for terminals 1 and 3.
7. When using a motor that is not provided with a thermal protector, setPr. 876, thermal protector input to 0, and set Pr. 9 (Pr. 452) electronic thermal (2nd electronic thermal).
8. The pin numbers will differ when using a motor other than the dedicated motor.
9. The dedicated motor's PLG N pin is the case grounding.
10. The terminal functions can be changed with the input terminal function selection (Pr. 180 to Pr. 183, Pr. 187).
11. The terminal functions can be changed with the output terminal function selection (Pr. 190 to Pr. 192, Pr. 195).
12. Change the connector according to the PLG power supply specifications.
13. The sink logic and source logic will change when the connector is changed.
14. Use of the 2W1kΩ is recommended when the settings are changed frequently.
15. Always ground the inverter and motor.
16. Refer to the standard specifications on page 5 and 6 for details on the input power specifications.

Explanation of terminal specifications

Type			Terminal symbol	Terminal name	Description
Main circuit			R,S,T	AC power supply input	Connect these to the commercial power supply. Do not connect anything when using the high-power factor converter (FR-HC) or power regeneration common converter (FR-CV).
			U,V,W	Inverter output	Connect these to the dedicated motor or 3-phase squirrel cage motor.
			R1,S1	Control circuit power supply	These are connected with the AC power terminals R and S. When displaying the errors or holding the error output, or when using the high-power factor converter (FR-HC) or power regeneration common converter (FR-CV), remove the jumpers from across terminals R-R1 and S-S1, and input the power to this terminal from an external source.
			P,PR	Brake resistor connection	Remove the jumper from across terminals PR-PX, and connect the optional brake resistor (FR-ABR) across terminals P-PR. A regenerative braking force can be attained when the resistor is connected to the 15k and smaller capacities.
			P,N	Brake unit connection	Connect the optional FR-BU type brake unit, high-power factor converter (FR-HC) and power regeneration common converter (FR-CV).
			P,P1	Power factory improvement	Remove the jumper from across terminals P-P1, and connect the optional power factor improvement DC reactor (FR-BEL).
			PR,PX	Built-in brake circuit connection	The built-in brake circuit will be valid when the terminals PX-PR are connected with the jumper. (Mounted on the 5.5k and smaller capacities.)
			⏚	Grounding	This terminal is used to ground the inverter chassis. Ground this terminal.
Control circuit	Input signal	Contact input	STF	Forward rotation start	This functions as the forward run command when the STF signal is ON, and the stop command when the signal is OFF. / If the STF and STR signals turn ON simultaneously, these will function as the stop command.
			STR	Reverse rotation start	This functions as the reverse run command when the STR signal is ON, and the stop command when the signal is OFF.
			DI1 to DI4	Digital input terminals 1 to 4	The terminal function will change according to the input terminal function selection (Pr. 180 to 183). Refer to the "common specifications" on page 7 for details on the terminal functions that can be changed.
			OH	Thermal protector input	This is the temperature detector terminal input for motor overheating protection.
			RES	Reset	This is used when resetting the holding state when the protection circuit has functioned. Turn the RES signal ON for 0.1s or more, and then turn OFF.
			SD	Contact input common (sink) Power ground terminal	This is the contact input common terminal or PLG power common terminal. This common is insulated from terminals 5 and SE. Do not ground this common.
			PC	24VDC power supply External transistor common Contact input common (source)	When connecting a transistor output (open collector output) such as a programmable controller (PLC), malfunctioning caused by the leakage current can be prevented by connecting the external power supply common for the transistor output to this terminal. This can be used as the 24VDC 0.1A power source between terminals PC and DS. When the source logic is selected, this will be the contact input common.
		Speed setting	10E	Speed setting power supply	10VDC, tolerable load current 10mA
			2	Speed setting (voltage)	When 0 to 10VDC is input, the maximum output frequency will be reached at 10V, and the input/output will be proportional. The input resistance is 10kΩ, and the maximum permissible input voltage is 20V.
			3	Torque setting terminal	This is the torque setting signal during torque control, and the torque limit signal during speed control and position control. This can be used as the input terminal during the torque bias function by using the external analog. The input is 0 to ±10VDC, the input resistance is 10kΩ, and the maximum permissible input voltage is ±20V.
			1	Multi-function setting terminal	This is the multi-function terminal that has various function when the No. 1 terminal is set. Refer to the instruction manual for details on the functions. The input is 0 to ±10VDC, the input resistance is 10kΩ, and the maximum permissible input voltage is ±20V.
			5	Speed setting common Analog signal output common	This is the common terminal for the speed setting (terminals 2, 1 or 3), and the common terminal for DA1 and DA2. This terminal is insulated from terminals SD and SE. Do not ground this common.
		PLG signals	PA	A phase signal input terminal	The A phase, B phase and Z phase signals are input from PLG. This is set to complementary as the default, so there is no connection to PAR, PBR and PZR.
			PAR	A phase reverse signal input terminal	
			PB	B phase signal input terminal	
			PBR	B phase reverse signal input terminal	
			PZ	Z phase signal input terminal	
			PZR	Z phase reverse signal input terminal	
			PG	PLG power terminal (+ side)	This is the PLG power supply. The power supply can be selected from 5V, 12V or 24VC. An external power supply can also be used.
			SD	Contact input common (sink) Power ground terminal	This is the contact input common terminal or PLG power common terminal. This common is insulated from terminals 5 and SE. Do not ground this common.
	Output signal	Contact	A,B,C	Error output	This is the 1c contact output which indicates that the inverter protection function has activated and the output has stopped. 200VAC 0.3A 30VDC 0.3A. When there is an error, there is discontinuity between B-C (continuity between A-C), and during normal operation, there is continuity between B-C (discontinuity between A-C). The terminal function will change according to the output terminal function selection (Pr. 195).
		Open collector	D01	Digital output 1 terminal	Permissible load 24VDC 0.1A. The terminal function will change according to the output terminal function section (Pr. 190 to Pr. 192.) Refer to the "common specifications" on page 7 for details on the terminal functions that can be changed.
			D02	Digital output 2 terminal	
			D03	Digital output 3 terminal	
			SE	Open collector output common	This is the common terminal for terminals DO1, DO2 and DO3. This common is insulated from terminals SD and 5.
		Analog	DA1	Analog signal output	One of 18 monitor items, such as rotation speed, is selected and output. The output signal is proportional to the size of each monitor item. / Default output item: Rotation speed monitor Output signal 0 to ±10VDC permissible load current 1mA
			DA2	Analog signal output	Default output item: Torque monitor Output signal 0 to 10VDC permissible load current 1mA
			5	Speed setting common	This is the speed setting (terminal 2, 1 or 3) common terminal or DA1 and DA2 common terminal. This common is insulated from terminals SD and SE. Do not ground this common.
	Communication	RS-485	—	PU connector	Communication using RS-485 is possible by using the PU connector. * Compliant standard: EIA Standards RS-485 * Transmission format: Multi-drop link method * Communication speed: 19200bps max. * Total length: 500m

Explanation of operation panel

Operation panel (FR-DU04-1)

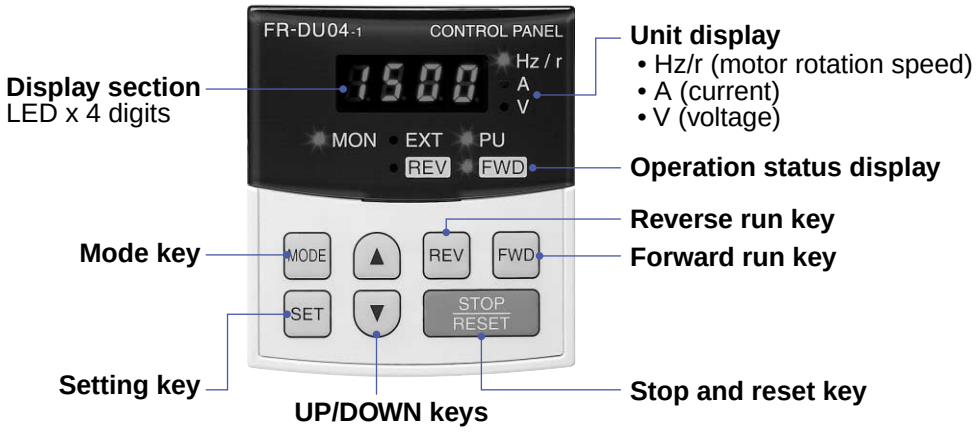

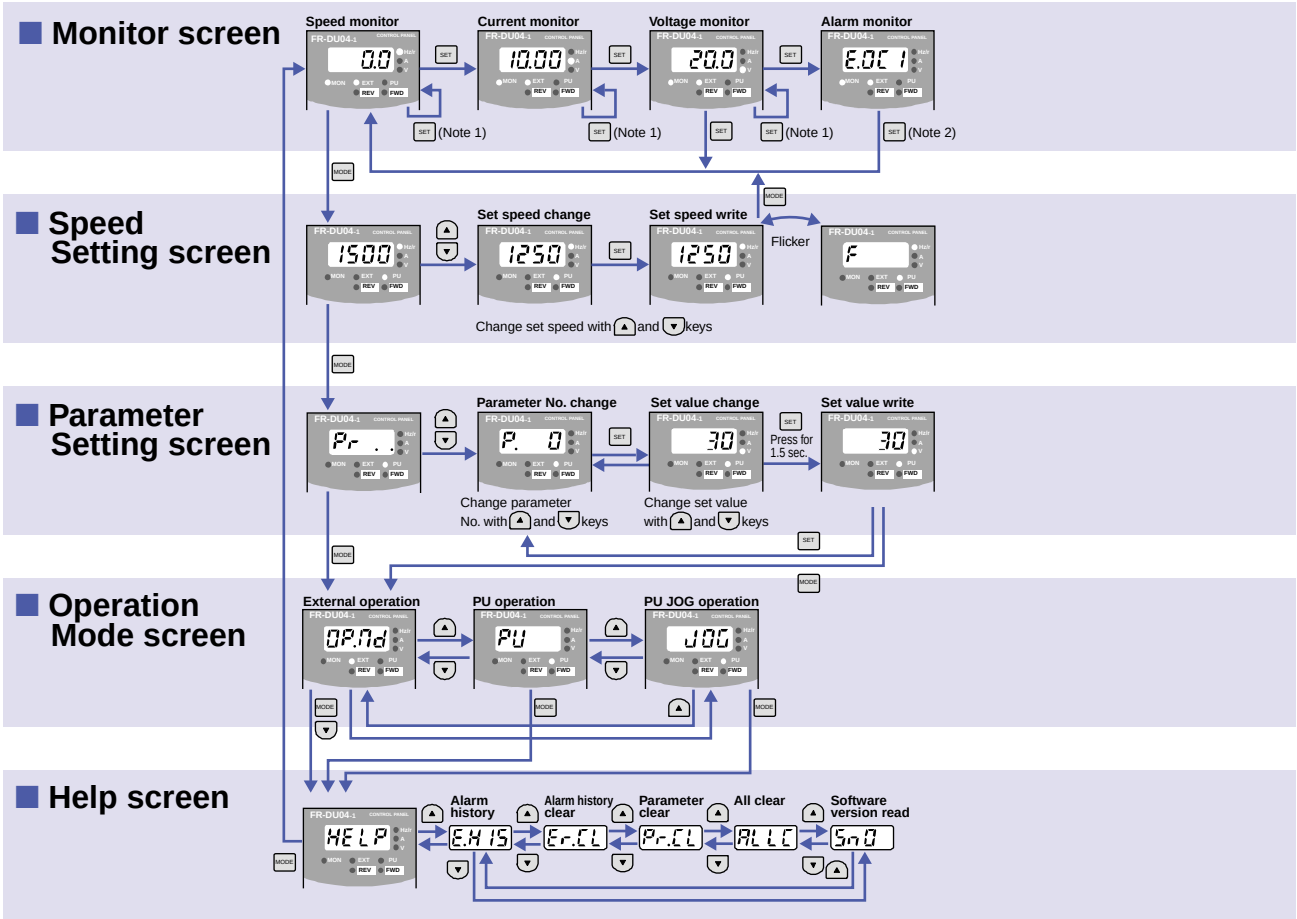

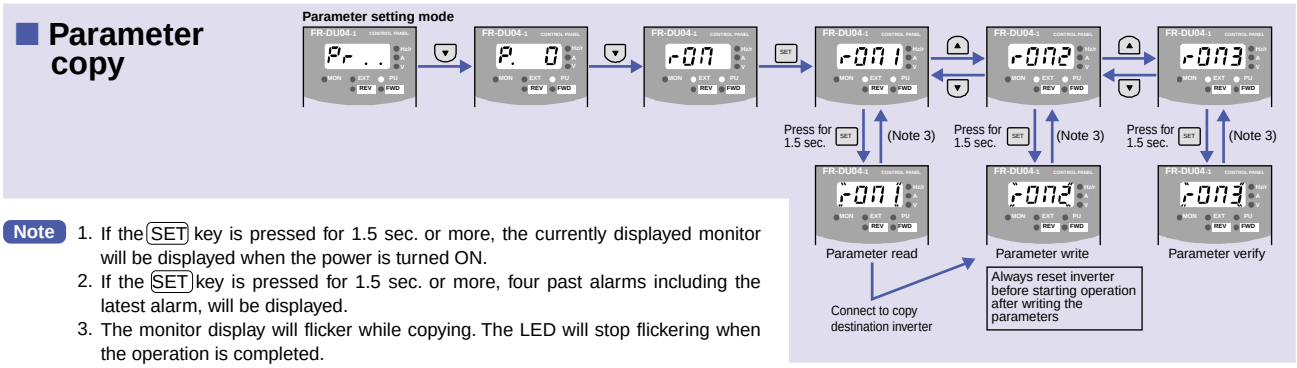

Note

1. If the SET key is pressed for 1.5 sec. or more, the currently displayed monitor will be displayed when the power is turned ON.
2. If the SET key is pressed for 1.5 sec. or more, four past alarms including the latest alarm, will be displayed.
3. The monitor display will flicker while copying. The LED will stop flickering when the operation is completed.

Explanation of parameter unit

Parameter unit FR-PU04V (option)

Appearance

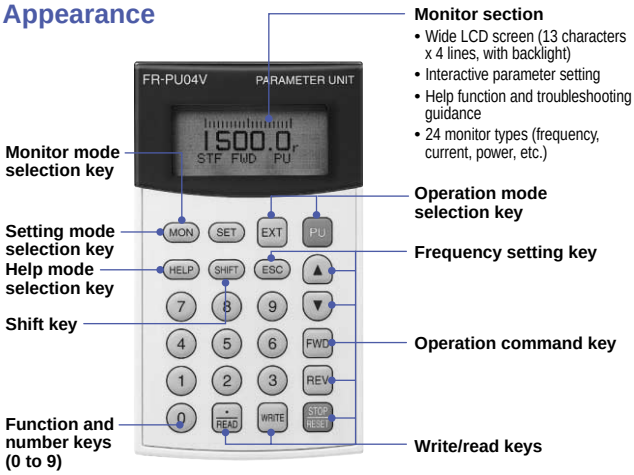

When FR-PU04V is installed in inverter unit

(Notes) 1. The parameter unit operations are basically the same as the conventional FR-PU02V.
2. The parameter unit is an option.

Example of operation

Parameter setting
Select the mode with the (SET) key. Input the setting value into the parameter.
(Example) To set 180 seconds for parameter 8 (deceleration time setting)

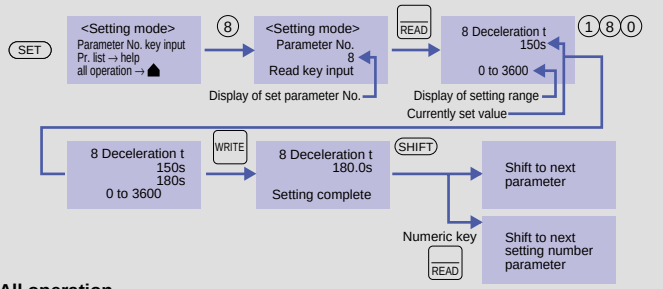

All operation
All parameters can be read, written and compared when selected with the (SET) key.

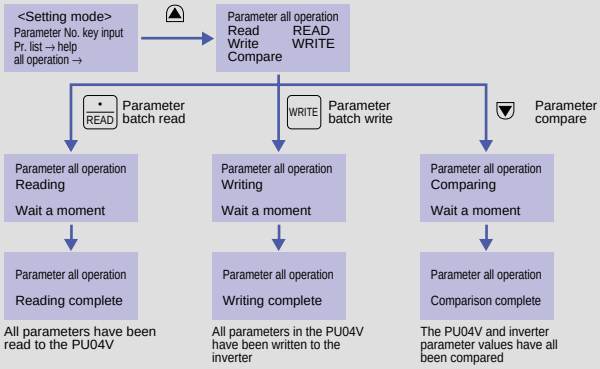

Changed value list
The changed value list can be read with the following operation.
(HELP) → Parameter (Read) → Change List (Read)

Inverter setup software

FR-SW1-SETUP-WE (Windows* 95, 98, NT, 2000, ME, XP compatible) (option)

The inverter setup software provides an easy-to-use inverter operation environment. This software can be used as an effective support tool from inverter startup to maintenance. The parameters can be set and monitored efficiently from a PC.

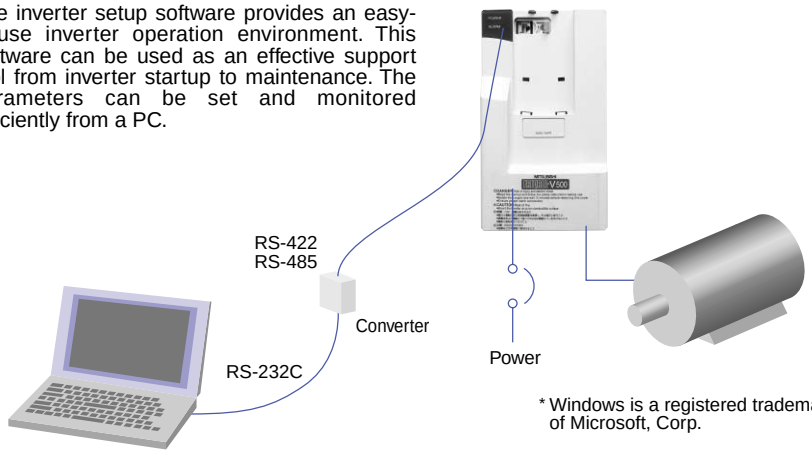

* Windows is a registered trademark of Microsoft, Corp.

Example of machine analyzer screen

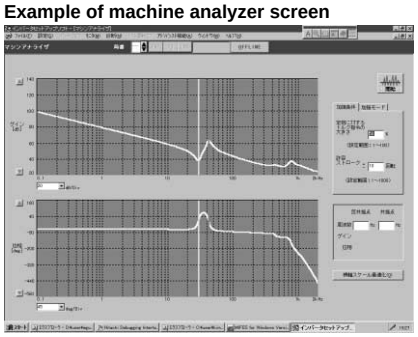

(Note) This is a reference screen, and may differ slightly from the actual screen.

Example of trace function oscilloscope screen

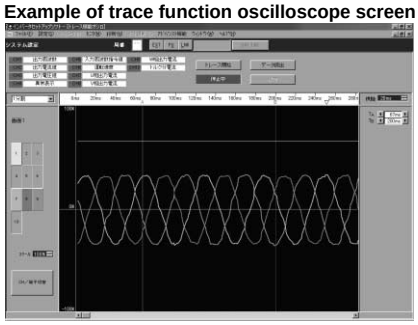

(Note) This is a reference screen, and may differ slightly from the actual screen.

Functions

■ New function

①Machine analyzer function
The motor is automatically accelerated and the machine system's resonance frequency analyzed.

②Trace function
When used in combination with the trace code operation, the software can be used as a high-coder. Data can be measured, and movements can be analyzed.

■ Standard function

①Parameter setting and editing
②Monitor
③Test operation
④Diagnosis
⑤System setting
⑥File
⑦Window
⑧Help

List of parameters

List of simple mode parameters

Function	Parameter No.	Name	Setting range	Minimum setting increment	Default setting
Basic functions	1	Maximum speed	0~3600r/min	1r/min	1500r/min
	2	Minimum speed	0~3600r/min	1r/min	0r/min
	4	3-speed setting (high speed)	0~3600r/min	1r/min	1500r/min
	5	3-speed setting (medium speed)	0~3600r/min	1r/min	750r/min
	6	3-speed setting (low speed)	0~3600r/min	1r/min	150r/min
	7	Acceleration time	0~3600s/0~360s	0.1s/0.01s	5s/15s (1.5K~5.5K/7.5K~55K)
	8	Deceleration time	0~3600s/ 0~360s	0.1s/0.01s	5s/15s (1.5K~5.5K/7.5K~55K)
Operation selection functions	72	PWM frequency selection	1~6	1	1
	77	Parameter write disable selection	0, 1, 2	1	0
	79	Operation mode selection	0~4, 6~8	1	0
Automatic tuning	95	Online automatic tuning selection	0, 1, 2	1	0
Additional function	160	Extended function selection	0, 1	1	0
Operation selection function	800	Control method selection	0~5, 20	1	0
Control system functions	818	Responsiveness setting	1~15	1	2
	819	Simple gain tuning selection	0, 1, 2	1	0

The following extended functions can be set by setting parameter 160 to "1".

List of extended function parameters

Function	Parameter No.	Name
Basic functions	0	Torque boost (manual)
	Refer to the simple mode parameters for parameter 1 and 2.	
	3	Base frequency
	Refer to the simple mode parameters for parameter 4 to 8.	
	9	Electronic thermal
Standard operation functions	10	DC braking operation speed
	11	DC braking operation time
	12	DC braking voltage
	13	Start speed
	15	JOG speed setting
	16	JOG acceleration/deceleration time
	17	MRS input selection
Operation selection functions	19	Base frequency voltage
	20	Acceleration/deceleration reference speed
	21	Acceleration/deceleration time unit
	22	Torque limit level
	24	Multi-speed setting (4th speed)
	25	Multi-speed setting (5th speed)
	26	Multi-speed setting (6th speed)
	27	Multi-speed setting (7th speed)
	28	Multi-speed input compensation

Function	Parameter No.	Name
Operation selection functions	29	Acceleration/deceleration pattern
	30	Regeneration function selection
	31	Speed jump 1A
	32	Speed jump 1B
	33	Speed jump 2A
	34	Speed jump 2B
	35	Speed jump 3A
	36	Speed jump 3B
	37	Rotation speed display
Output terminal functions	41	Speed reached operation width
	42	Speed detection
	43	Speed detection during reverse run
2nd functions	44	2nd acceleration/deceleration time
	45	2nd deceleration time
Output terminal function	50	2nd speed detection
Display functions	52	DU/PU main display data selection
	53	PU level display data selection
	54	DA1 terminal function selection
	55	Speed monitor reference
	56	Current monitor reference
Restart	57	Restart coasting time
	58	Restart rising time

Function	Parameter No.	Name
Additional function	59	Remote setting function selection
Operation selection functions	60	Intelligent mode selection
	65	Retry selection
	67	No. of retries at alarm occurrence
	68	Retry execution standby time
	69	No. of retry executions display clear
	70	Special regenerative brake usage duty
	71	Applied motor
	Refer to the simple mode parameters for parameter 72.	
	73	Speed setting signal
	75	Reset selection/PU disconnection detection/ PU stop selection
	Refer to the simple mode parameters for parameter 77.	
	78	Reverse run prevention selection
	Refer to the simple mode parameters for parameter 79.	
Motor constants	80	Motor capacity
	81	No. of motor poles

Function	Parameter No.	Name
Motor constants	82 (note)	Motor constant exciting current (no-load current)
	83	Motor rated voltage
	84	Motor rated frequency
	90 (note)	Motor constants (R1)
	91 (note)	Motor constants (R2)
	92 (note)	Motor constants (L1)
	93 (note)	Motor constants (L2)
	94 (note)	Motor constants (X)
	Refer to the simple mode parameters for parameter 95.	
	96	Automatic tuning setting/state
3rd functions	110	3rd acceleration/deceleration time
	111	3rd deceleration time
Output terminal function	116	3rd speed detection
Communi-cation functions	117	Station No.
	118	Communication speed
	119	Stop bit length/data length
	120	Parity check selection
	121	No. of communication retries
	122	Communication check time interval
	123	Standby time setting
	124	CR.LF validity selection
PID control	128	PID operation selection
	129	PID proportional band
	130	PID integral time
	131	Upper limit
	132	Lower limit
	133	PID operation target value during PU operation
	134	PID differential time
Backlash	140	Halt backlash acceleration stopping frequency
	141	Halt backlash acceleration stopping time
	142	Halt backlash deceleration stopping frequency
	143	Halt backlash deceleration stopping time
Display functions	144	Speed setting changeover
	145	Parameter unit language changeover
Current detection	150	Output current detection level
	151	Output current detection time
	152	Zero current detection level
	153	Zero current detection time
Auxiliary functions	156	Stall prevention operation selection
	157	OL signal output timer
Display functions	158	DA2 terminal function selection
	Refer to the simple mode parameters for parameter 160.	
Restart after instantaneous power failure	162	Restart after instantaneous power failure operation selection
	163	Restart 1st rising time
	164	Restart 1st rising voltage
	165	Restart current limit level

Function	Parameter No.	Name
Monitor initialization	171	Actual operation time counter clear
Terminal assignment functions	180	DI1 terminal function selection
	181	DI2 terminal function selection
	182	DI3 terminal function selection
	183	DI4 terminal function selection
	187	STR terminal function selection
	190	DO1 terminal function selection
	191	DO2 terminal function selection
	192	DO3 terminal function selection
	195	ABC terminal function selection
Multi-speed operation	232	Multi-speed setting (8th speed)
	233	Multi-speed setting (9th speed)
	234	Multi-speed setting (10th speed)
	235	Multi-speed setting (11th speed)
	236	Multi-speed setting (12th speed)
	237	Multi-speed setting (13th speed)
	238	Multi-speed setting (14th speed)
	239	Multi-speed setting (15th speed)
Auxiliary functions	240	Soft-PWM setting
	244	Cooling fan operation selection
Stop selection function	250	Stop selection
Operation selection function	251	Output phase failure protection selection
Additional functions	252	Override bias
	253	Override gain
Power failure stop functions	261	Power failure stop selection
	262	Subtraction speed at start of deceleration
	263	Subtraction process start speed
	264	Deceleration time at power failure 1
	265	Deceleration time at power failure 2
	266	Deceleration time changeover speed during power failure
Brake sequence	278	Brake release speed
	279	Brake release current
	280	Brake release current detection time
	281	Brake operation time at starting
	282	Brake operation speed
	283	Brake operation time at stopping
	284	Deceleration detection function selection
	285	Overspeed detection speed
Droop	286	Droop gain
	287	Droop filter time constant
	288	Droop function operation selection
Additional function	342	EEPROM write selection
Orientation	350	Stop position command selection
	351	Orientation changeover speed
	356	Internal stop position command

Function	Parameter No.	Name
Orientation	357	Orientation complete zone
	360	External position command selection
	361	Position shift
	362	Orientation position loop gain
Control system function	374	Overspeed detection level
S-pattern C	380	Acceleration S-pattern 1
	381	Deceleration S-pattern 1
	382	Acceleration S-pattern 2
	383	Deceleration S-pattern 2
Orientation	393	Orientation selection
	396	Orientation speed gain (P item)
	397	Orientation speed integral time
	398	Orientation speed gain (D item)
	399	Orientation deceleration rate
Position control	419	Position command input selection
	420	Command pulse scale numerator
	421	Command pulse scale denominator
	422	Position loop gain
	423	Position feed forward gain
	424	Position command acceleration/deceleration time constant
	425	Position feed forward command filter
	426	In-position width
	427	Excessive error level
	430	Pulse monitor selection
Motor constants	450	2nd applicable motor
	451	2nd motor control method selection
	452	2nd electronic thermal
	453	2nd motor capacity
	454	No. of 2nd motor poles
Position control	464	Digital position control sudden stop deceleration time
	465	1st position feed rate low-order 4 digits
	466	1st position feed rate high-order 4 digits
	467	2nd position feed rate low-order 4 digits
	468	2nd position feed rate high-order 4 digits
	469	3rd position feed rate low-order 4 digits
	470	3rd position feed rate high-order 4 digits
	471	4th position feed rate low-order 4 digits
	472	4th position feed rate high-order 4 digits
	473	5th position feed rate low-order 4 digits
	474	5th position feed rate high-order 4 digits
	475	6th position feed rate low-order 4 digits
	476	6th position feed rate high-order 4 digits
	477	7th position feed rate low-order 4 digits
	478	7th position feed rate high-order 4 digits
	479	8th position feed rate low-order 4 digits
	480	8th position feed rate high-order 4 digits
	481	9th position feed rate low-order 4 digits
	482	9th position feed rate high-order 4 digits
	483	10th position feed rate low-order 4 digits
	484	10th position feed rate high-order 4 digits
	485	11th position feed rate high-order 4 digits

Extended function parameters

Function	Parameter No.	Name
Position control	486	11th position feed rate high-order 4 digits
	487	12th position feed rate low-order 4 digits
	488	12th position feed rate high-order 4 digits
	489	13th position feed rate low-order 4 digits
	490	13th position feed rate high-order 4 digits
	491	14th position feed rate low-order 4 digits
	492	14th position feed rate high-order 4 digits
	493	15th position feed rate low-order 4 digits
	494	15th position feed rate high-order 4 digits
Remote output	495	Remote output selection
	496	Remote output details 1
	497	Remote output details 2
Operation selection functions	Refer to the simple mode parameters for parameter 800.	
	801	Torque characteristics selection
	802	Pre-excitation selection
	803	Constant output range torque characteristics selection
	804	Torque command input selection
	805	Torque command (RAM)
	806	Torque command (E^2ROM)
	807	Speed limit selection
	808	Forward run speed limit
	809	Reverse run speed limit
Control system functions	810	Torque limit input method selection
	812	Torque limit level (regeneration)
	813	Torque limit level (third quadrant)
	814	Torque limit level (fourth quadrant)
	815	Torque limit level 2
	816	Torque limit during acceleration
	817	Torque limit during deceleration
	Refer to the simple mode parameters for parameter 818, 819.	
	820	Speed control P gain 1
	821	Speed control integral time 1
	822	Speed setting filter 1
	823	Speed detection filter 1
	824	Torque control P gain 1
	825	Torque control integral time 1
	826	Torque setting filter 1
	827	Torque detection filter 1
	828	Model speed control gain
	830	Speed control P gain 2
	831	Speed control integral time 2
	832	Speed setting filter 2
	833	Speed detection filter 2
	834	Torque control P gain 2
	835	Torque control integral time 2
	836	Torque setting filter 2
	837	Torque detection filter 2

Function	Parameter No.	Name
Torque bias	840	Torque bias selection
	841	Torque bias 1
	842	Torque bias 2
	843	Torque bias 3
	844	Torque bias filter
	845	Torque bias operation time
	846	Torque bias balance compensation
	847	Torque bias during lowering No. 3 bias
	848	Torque bias during lowering No. 3 gain
Additional functions	849 (Note)	Analog calibration offset adjustment
	851	No. of PLG pulses
	852	PLG rotation direction
	854	Excitation ratio
	859 (Note)	Torque current
	862	Notch filter frequency 0 to 31 No operation when 0 is set
	863	Notch filter depth 0 to 3
	864	Torque detection
	865	Low speed detection
Display functions	866	Torque monitor reference
	867	DA1 output filter
Terminal assignment functions	868	No. 1 terminal function assignment
Protection functions	870	Speed deflection level
	871	Speed deflection time
	873	Speed limit
	874	OLT level setting
Operation selection functions	875	Fault definition
	876	Thermal protector input
Control system functions	877	Speed feed forward control/ model adaptive speed control selection 0: No selection 1: Speed feed forward control 2: Model adaptive speed control
	878	Speed feed forward filter
	879	Speed feed forward torque limit
	880	Load inertia ratio
	881	Speed feed forward gain
Maintenance functions	890	Maintenance output setting time
	891	Maintenance output timer
	892	Maintenance output signal clear

Function	Parameter No.	Name
Calibration functions	900	DA1 terminal calibration
	901	DA2 terminal calibration
	902	Speed setting No.2 bias
	903	Speed setting No.2 gain
	904	Torque command No.3 bias
	905	Torque command No.3 gain
	917	No. 1 terminal bias (speed)
	918	No. 1 terminal gain (speed)
	919	No. 1 terminal bias (torque/flux)
	920	No. 1 terminal gain (torque/flux)
Additional functions	990	Buzzer sound control
	991	LCD contrast

Note Can be set by setting Pr. 77 to 801.

Explanation of simple mode parameters

"Pr." is the abbreviation for parameter.

Pr. 1 "Upper limit setting", Pr. 2 "Lower limit setting"

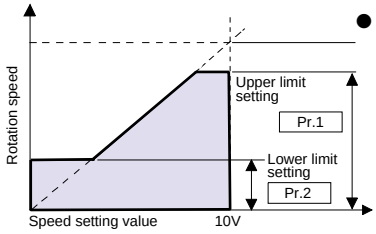

- The output speed's upper limit and lower limit are clamped.

Pr. 4 "3-speed setting (high speed)" Pr. 5 "3-speed setting (medium speed)" Pr. 6 "3-speed setting (low speed)"

- Each speed (RH, RM, RH) can be selected by changing the contact signal issued from an external source.
- Each speed can be set in the range of 0 to 3600r/min even when the inverter is running.
- Up to 15 speeds can be set with the extended functions.

Pr. 7 "Acceleration time", Pr. 8 "Deceleration time"

- For the acceleration time, set the time to reach the acceleration/deceleration reference speed Pr. 20 (default value: 1500r/min) from 0r/min, and for the deceleration time, set the time to reach the 0r/min from Pr. 20 (default value: 1500r/min).

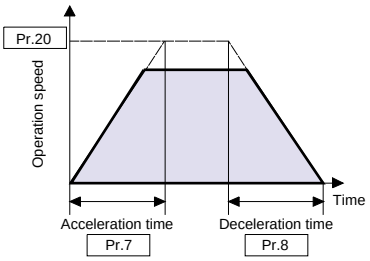

Pr. 72 "PWM frequency"

- The motor noise will increase if the PWM carrier frequency is lowered, however, the noise generated from and the leakage current from the inverter will drop.
  The Pr. 72 setting range is 1 to 6. Note that 1 is 2.25kHz, and 6 is 13.5kHz. All other settings are the setting value x 2.25kHz.
  (Note) Pr. 72 may be invalidated by the Pr. 240 setting. Refer to the instruction manual for details.

Pr. 77 "Parameter write disable selection"

- Whether each parameter can be written or disable can be selected. This prevents the parameters from being rewritten, etc., due to incorrect operations.

Setting value	Details
0	Parameter write possible (only when stopped in the PU operation mode) (Note 1)
1	Parameter write not possible (Note 1)
2	Parameter write possible even during operation (Note 1)

(Note 1) Note that the details may differ according to the parameter, so refer to the Instruction Manual for details.

Pr. 79 "Operation mode selection"

- The inverter operation modes include operation with external signals (external operation), operation with the PU (FR-DU04-1/FR-PU04V), and operation with combined use of the PU operation and external operation (external/PU combined operation).

Pr. 79 setting value	Function	
0	The external operation mode is entered when the power is turned ON. Operation with the PU or external operation is possible.	
1	PU operation mode	
2	External operation mode	
3	Speed command	Start command
	Set with PU (FR-DU04-1/FR-PU04V) (direct setting, ▲/▼ keys) or with external signal input (only for setting multi-speed).	External signal input (terminals STF, STR)
4	Speed command	Start command
	External signal input (terminals 2, 1, JOG, multi-speed selection)	Input with (FR-DU04-1/FR-PU04V) (FWD key , REV key)
6	Switch over mode	
7	External operation mode (PU operation interlock)	
8	Change to mode other than external operation mode (not possible during operation)	

Pr. 95 "Online automatic tuning"

- Favorable characteristics can be achieved even if the motor's secondary resistance value changes due to a rise in the motor temperature. This is effective for increasing the torque control accuracy.

Setting value	Details
0	Online automatic tuning disabled
1	Tuning at startup (at startup)
2	Adaptive flux observer (constant)

Pr. 160 "Extended function display selection"

- This parameter is used to set and display the extended function parameters.

Setting value	Details
0	Display only simple mode parameters
1	Display all parameters

Pr. 800 "Control method selection"

- Select the inverter control method from speed control, torque control or position control.

Parameter No.	Default setting value	Setting range
800	0	0~5, 20

- The following combinations can be used with the motor changeover terminal MC by setting Pr. 800 "control method selection".

Setting value	Drive method	Control method
0	Vector control	Speed control
1		Torque control
2		Speed - torque changeover
3		Position control
4		Speed - position changeover
5		Position-torque changeover
20	V/f control	Speed control

Pr. 818 "Responsiveness setting"

- Set the responsiveness level. The track ability in respect to the command will improve when a large value is set, but vibration will occur if the value is set too high.

Setting value	Details
1 to 15	1: Low response to 15: High response

Pr. 819 "Simple tuning selection"

- The load inertia ratio (load moment of inertia rate) in respect to the motor is estimated in real-time from the torque command and rotation speed during motor operation. The optimum gain for speed control and position control is automatically estimated from this value and the responsiveness setting value.

Setting value	Details
0	No tuning
1	Load estimation valid, gain estimation valid
2	Load manual input

Connection example

Speed control

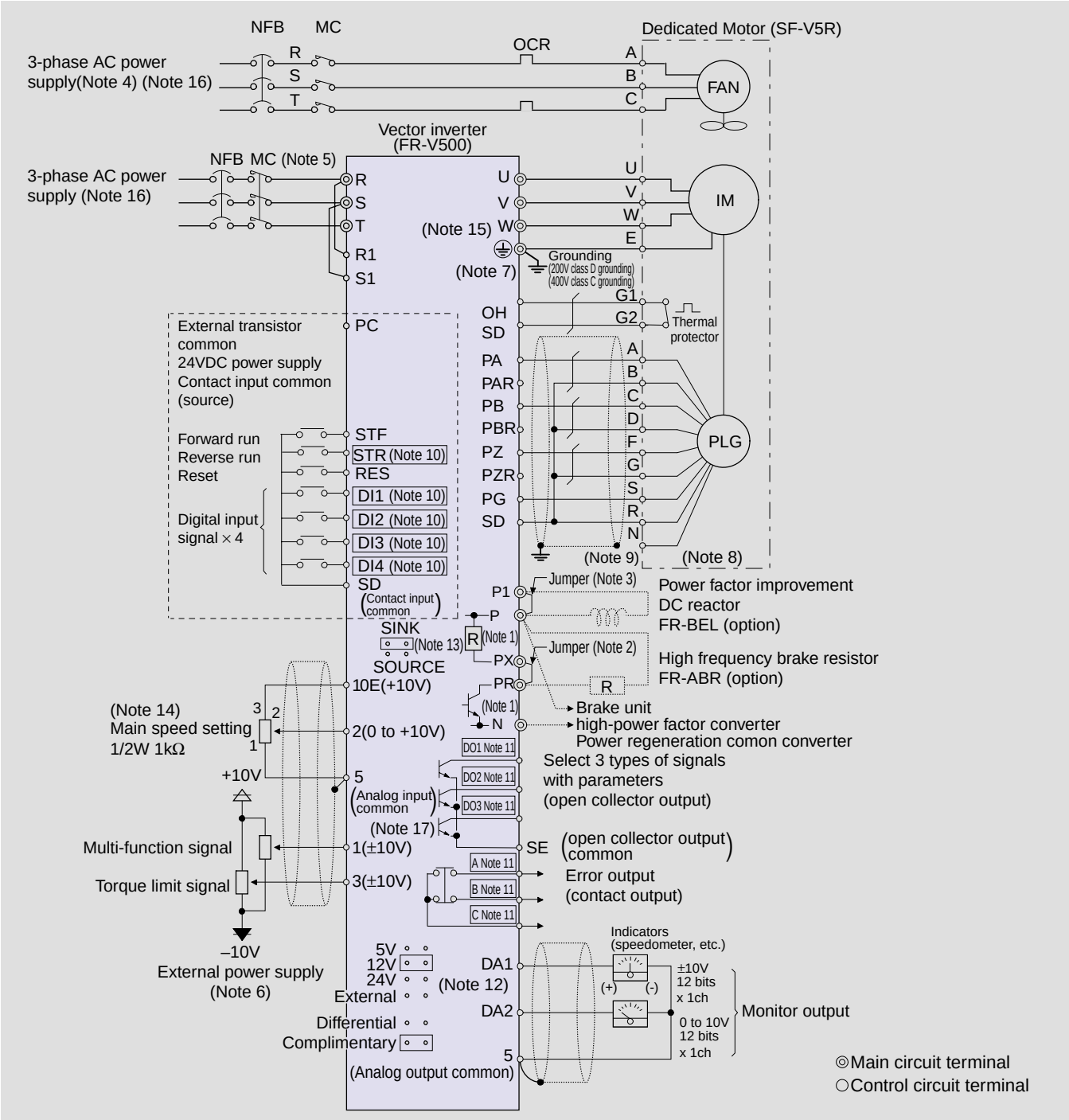

Note

1 Terminal PR is mounted on the 15K and smaller capacities, and terminal PX is mounted on the 5.5K and smaller capacities.
2 When using FR-ABR with the 5.5kW or smaller capacity, remove this jumper.
3 Remove this jumper when using FR-BEL.
4 The fan power is a single-phase power for the 7.5kW or smaller dedicated motors.
5 The converter's life will be shortened by repeated in-rush currents when the power is turned ON, so do not turn the power ON and OFF frequently.
6 Prepare a ±10V external power for terminals 1 and 3.
7 When using a motor that is not provided with a thermal protector, set the Pr. 876 thermal protector input to 0, and set Pr. 9 (Pr. 452) electronic thermal (2nd electronic thermal).
8 The pin numbers will differ when using a motor other than the dedicated motor.
9 The dedicated motor's PLG N pin is the case grounding.
10 The terminal functions can be changed with the input terminal function selection (Pr. 180 to Pr. 183, Pr. 187).
11 The terminal functions can be changed with the output terminal function selection (Pr. 190 to Pr. 192, Pr. 195).
12 Change the connector according to the PLG power supply specifications.
13 The sink logic and source logic will change when the connector is changed.
14 Use of the 2W1kΩ is recommended when the settings are changed frequently.
15 Always ground the inverter and motor.
16 Refer to the standard specifications on page 5 and 6 for details on the input power specifications.
17 The function of this terminal will change according to Pr. 868 "No. 1 terminal function assignment". As the default, this assists addition to the terminal 2 setting signal.

Torque control

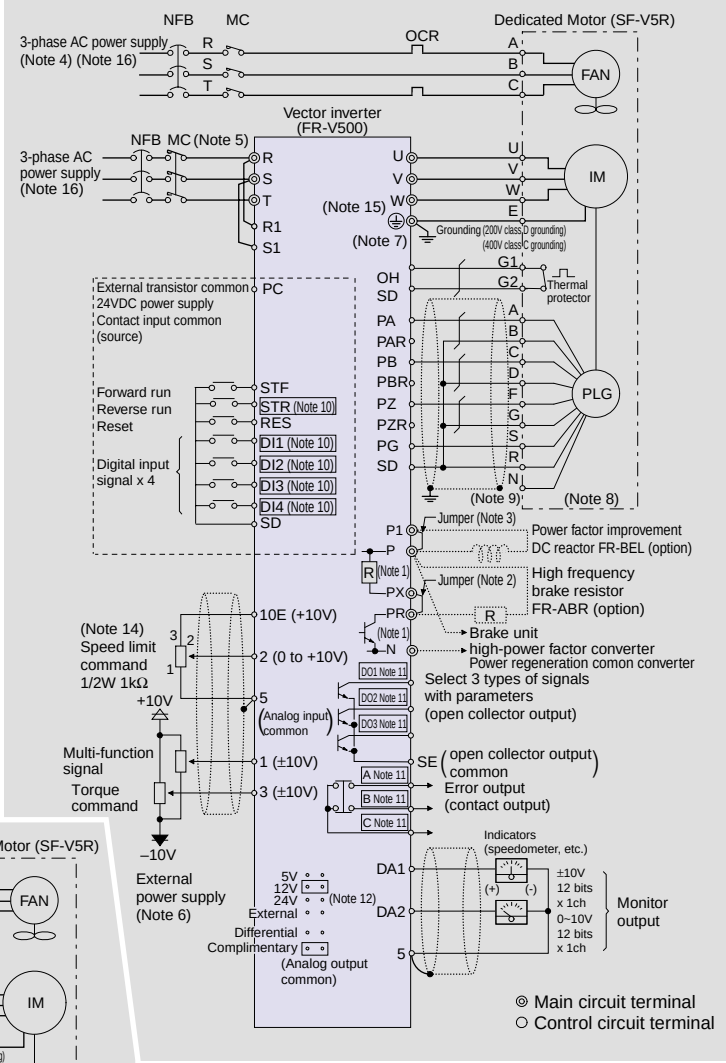

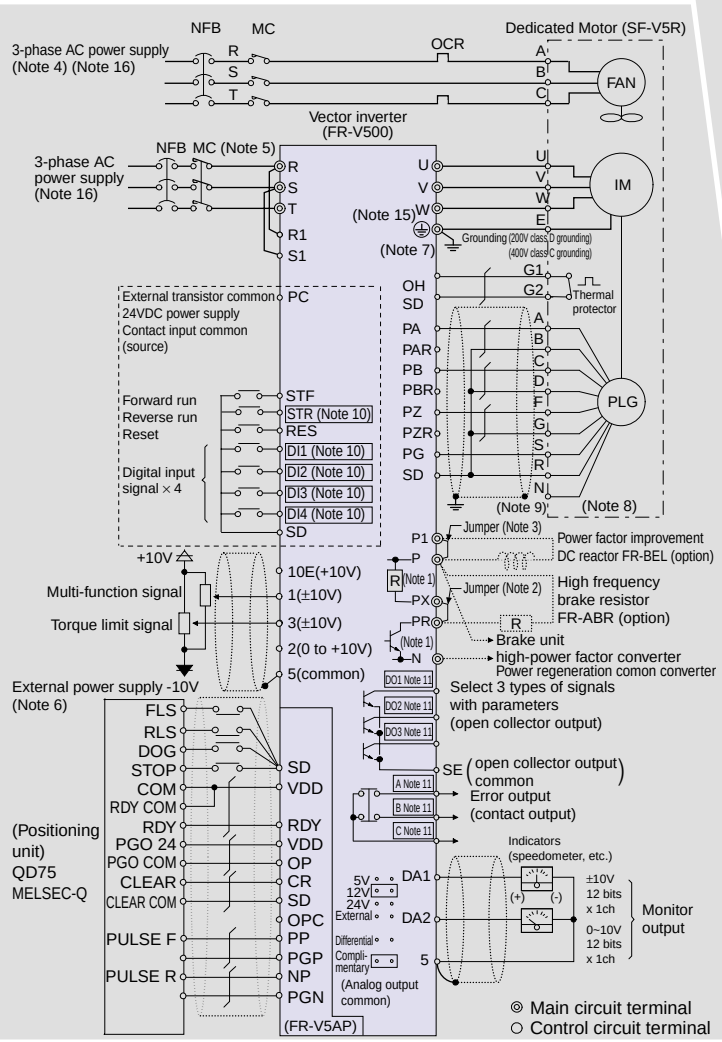

Position control

Note

1. Terminal PR is mounted on the 15K and smaller capacities, and terminal PX is mounted on the 5.5K and smaller capacities.
2. When using FR-ABR with the 5.5kW or smaller capacity, remove this jumper.
3. Remove this jumper when using FR-BEL.
4. The fan power is a single-phase power for the 7.5kW or smaller dedicated motors.
5. The converter's life will be shortened by repeated rush currents when the power is turned ON, so do not turn the power ON and OFF frequently.
6. Prepare a ±10V external power for terminals 1 and 3.
7. When using a motor that is not provided with a thermal protector, set the Pr. 876 thermal protector input to 0, and set Pr. 9 (Pr. 452) electronic thermal (2nd electronic thermal).
8. The pin numbers will differ when using a motor other than the dedicated motor.
9. The dedicated motor's PLG N pin is the case grounding.
10. The terminal functions can be changed with the input terminal function selection (Pr. 180 to Pr. 183, Pr. 187).
11. The terminal functions can be changed with the output terminal function selection (Pr. 190 to Pr. 192, Pr. 195).
12. Change the connector according to the PLG power supply specifications.
13. The sink logic and source logic will change when the connector is changed.
14. Use of the 2W1kΩ is recommended when the settings are changed frequently.
15. Always ground the inverter and motor.
16. Refer to the standard specifications on page 5 and 6 for details on the input power specifications.

Protective Functions

Function name	Description	Display	Type (Note 5) Major fault	Type (Note 5) Minor fault
Overcurrent shut-off during acceleration	If the inverter's output current reaches approx. 200% or more of the inverter's rated current during acceleration, the protective circuit will activate and the inverter output will stop. This will also display when the power is supplied only to the R1 and S1 terminals and the start signal is input.	E.0C1	○	
Overcurrent shut-off during constant speed	If the inverter's output current reaches approx. 200% or more of the inverter's rated current during constant speed operation, the protective circuit will activate and the inverter output will stop.	E.0C2	○	
Overcurrent shut-off during deceleration	If the inverter's output current reaches approx. 200% or more of the inverter's rated current during deceleration (during operation other than acceleration or constant speed), the protective circuit will activate and the inverter output will stop.	E.0C3	○	
Regenerative overvoltage shut-off during acceleration	If the inverter's internal main circuit DC voltage rises above the specified value due to an excessive regeneration energy during acceleration, the protective circuit will activate and the inverter output will stop. This may also activate due to the surge voltage generated in the power system.	E.0V1	○	
Regenerative overvoltage shut-off during constant speed	If the inverter's internal main circuit DC voltage rises above the specified value due to an excessive regeneration energy during constant speed operation, the protective circuit will activate and the inverter output will stop.	E.0V2	○	
Regenerative overvoltage shut-off during deceleration and when stopped	If the inverter's internal main circuit DC voltage rises above the specified value due to an excessive regeneration energy during deceleration or when stopped, the protective circuit will activate and the inverter output will stop.	E.0V3	○	
Motor overload shut-off (electronic thermal) (Note 1) (Note 6)	The electronic thermal built into the inverter detects overheating of the motor caused by a drop in the cooling performance by an overload or during low-speed operation, and stops the inverter output. When operating a multi-pole motor or several motors during V/f control, the motor cannot be protected, so provide a thermal relay on the inverter's output side.	E.THM	○	
Inverter overload shut-off (electronic thermal) (Note 1)	If a current exceeding 150% or more of the rated output current flows and an overcurrent cutoff does not occur (200% or less), the electronic thermal will activate at the inverse time characteristics and will stop the inverter output to protect the output transistor.	E.THT	○	
Instantaneous power failure protection (Note 2)	If a power failure exceeding 15ms (including inverter input shut-off) occurs, the instantaneous power failure protection function will activate to prevent the control circuit from malfunctioning, and the inverter output will stop. At this time, the error warning output contact will open (across terminals B-C) and close (across terminals A-C). If the power failure continues for 100ms or longer, the error warning output will not function, and if the start signal is ON when the power is recovered, the inverter will restart. (The inverter operation will continue if the power fails for 15ms or less.)	E.IPF	○	
Undervoltage protection	When the inverter's power voltage drops, the control circuit will not function properly. In addition, the motor torque will drop and the heating will increase. Thus, the inverter output will stop when the power voltage drops to approx. 150V or less. The undervoltage protection function will activate when the jumper across P and P1 is removed.	E.UVT	○	
Fin overheating	When the cooling fin overheats, the temperature sensor will activate and stop the inverter output.	E.FIN	○	
Brake transistor error	If an error occurs in the transistor for the brake circuit, the inverter output will stop. Note that in this case, the inverter's power must be shut-off immediately.	E.BE	○	
Output side ground fault current	If a ground fault occurs on the inverter's output side and a ground fault overcurrent flows, the inverter output will stop.	E.GF	○	
External thermal operation (Note 7)	If the motor overheat protection thermal relay provided externally or the motor embedded type temperature relay activates (contact options), the inverter output will stop. Even if the relay contact is automatically recovered, the inverter will not restart until resetting is carried out.	E.0HT	○	
Motor overload	Operation will stop when the motor load is excessive.	E.OLT	○	
Option error	When the dedicated built-in option for the inverter is installed, the inverter output will stop if the setting is incorrect or the connection (connector) is faulty.	E.OPT	○	
Option slot error	If a function error (communication option communication error, contact fault in built-in option other than communication option) occurs in the option mounted in each slot, the inverter output will stop.	E.OP1 ~OP3	○	
Option error	If a contact fault occurs in the connector between the inverter unit and communication option or if an error occurs in the communication option, the inverter output will stop.	E. 1 ~E. 3	○	
Parameter error	When an error occurs in the stored parameters (ex.: EEPROM fault)	E.PE	○	
PU disconnection	When "2", "3", "16" or "17" is set for Pr. 75 "reset selection/PU disconnection detection/PU stop selection", the inverter output will stop when communication with the PU is terminated, such as if the operation panel or parameter unit is disconnected. If Pr. 121 is set to "9999" with RS-485 communication from the PU connector, and continuous communication errors exceeding the tolerable No. of retries occurs, the inverter output will stop. The inverter output will also stop when the time communication set in Pr. 122 has elapsed.	E.PUE	○	
No. of retries exceeded	If operation cannot be resumed correctly within the No. of set retries, the inverter output will stop.	E.RET	○	
Output phase failure protection	If any of the three phases (U, V, W) on the inverter's output side (load side) fails, the inverter output will stop.	E.LF	○	
CPU error	If the built-in CPU's operation does not end within the specified time, it will be judged that an error has occurred, and the inverter output will stop.	E.CPU	○	
CPU error	If the built-in CPU's peripheral circuit operation does not end within the specified time, or if there is an error in the data received by the built-in CPU, it will be judged that an error has occurred, and the inverter output will stop.	E. 6	○	
		E. 7	○	
24VDC power output short-circuit	If the 24VDC power output from the PC terminal or encoder power supply is short-circuited, the power output will be cut off. At this time, all of the external contact inputs will turn OFF. This cannot be reset with the terminal RES input. To reset, use the operation panel or turn the power OFF and ON.	E.P24	○	
Operation panel power short-circuit	If the operation panel power (PU connector P5S) or encoder power supply is short-circuited, the power output will be cut off. At this time, use of the operation panel (parameter unit) and RS-485 communication from the PU connector will be disabled. To reset, input the terminal RES, or turn the power OFF and ON.	E.CTE	○	
Brake sequence error	If a sequence error occurs while using the brake sequence function (Pr. 278 to Pr. 285), the inverter output will be stopped.	E.MB1 ~7	○	
Overspeed occurrence	This indicates that the motor speed has exceeded the overspeed setting level (Pr. 374).	E.OS	○	
Excessive speed deflection detection	If the motor suddenly accelerates or decelerates due to the load during vector control, preventing the motor speed to be controlled according to the speed commands, the inverter output will be stopped.	E.0SD	○	
Disconnection detection	The inverter output will be stopped if the PLG encoder signal is disconnected.	E.ECT	○	
Excessive position error	This indicates that the difference of the position command and position feedback exceeds the reference (Pr. 427).	E.0D	○	
Encoder no-signal	The encoder pulses for the FR-V5AM are not being input.	E.ECA	○	
12VDC power output short-circuit	The 12VDC power for the encoder has short-circuited.	E.P12	○	
Encoder phase error	If the inverter's rotation command and the motor's actual rotation direction, detected by the PLG, differ, the inverter output will stop. (This is detected only when offline automatic tuning in the "rotating mode" is executed.)	E.EP	○	
Fan fault	When the inverter has a built-in cooling fan, if the cooling fan stops with a fault, or if the operation differs from the Pr. 244 "cooling fan operation selection", the state will be indicated on the operation panel.	FN		○

Function name		Description	Display	Type (Note 5) Major fault	Minor fault
Stall prevention (overcurrent)		This indicates that the torque is being limited during vector control. During V/f control, this indicates that a current exceeding 150% or more (Note 3) of the inverter's rated current is flowing.	0L		
Speed limiting output		This indicates that the speed is being limited.	SL		
Stall prevention (overvoltage)	During deceleration	If the motor's regenerative energy increases and exceeds the braking capability, dropping of the rotation speed will be stopped to prevent an overvoltage shut-off from occurring. Deceleration will resume when the regenerative energy has decreased.	oL		
PU stop		This occurs if operation has been stopped with the operation panel or parameter unit (FR-PU04V) key when operating in the external operation mode for which Pr. 75 "reset selection/PU stop selection" is set.	PS		
Regenerative brake pre-alarm		This indicates that the motor's regenerative brake usage duty has reached 85% of the value set for Pr. 70 "Special regenerative brake usage duty". A regenerative overvoltage (E.OV_) will occur when the regenerative brake usage duty reaches 100%.	rb		
Electronic thermal		This indicates that the electronic thermal count value has reached 85% of the set level. The motor overload shut-off (E.THM) will occur when 100% of the set level is reached.	TH		
Error		This alarm appears in the following cases: • When the RES signal is ON • When setting of the parameters was attempted with the external operation mode • When the operation mode was changed during operation • When the parameter setting exceeds the setting range • When the PU and inverter cannot communicate correctly • When setting of the parameters was attempted during operation (when signals STF and STR are ON) • When setting of the parameters was attempted while parameter writing is disabled with Pr. 77 "parameter write disable selection"	Err.		
SSCNET error		This indicates that a connection fault or communication error has occurred.	CF		
Maintenance output		This indicates that the inverter's cumulative power ON time has excceded a set time.	MT		

Note
1. The electronic thermal's internal thermal count data will be initialized when the inverter is reset.
2. An error will not be displayed or output when an instantaneous power failure occurs. However, protection will activate in the inverter to prevent faults from occurring. Depending on the operation status (load size, acceleration/deceleration time setting, etc.), the overcurrent protection may function when the power is restored.
3. The stall prevention operation current can be set. The default value is 150%.
4. Major fault: When the protection function activates, the inverter output will be cutoff and an error will be output. Minor fault: The output will not be cutoff even if the protection function activates. The minor fault signal can be output with parameter settings.
5. Note that other protective functions may be added.
6. This does not function in the default state.
7. In the default state, an error will occur if OH-SD are not connected.

Selection of peripheral devices and options

List of peripheral devices

Voltage	Motor output (kW)	Applicable inverter type	No-fuse breaker (NFB) (Note 1) or earth leakage breaker (ELB) (Note 2) Standard	With power factor improvement reactor	Power factor improvement AC reactor	Power factor improvement DC reactor	Magnetic contactor (MC)	Wire (mm²) (Note 3) R,S,T	U,V,T
200V class	1.5	FR-V520-1.5K	30AF 15A	30AF 15A	FR-BAL-1.5K	FR-BEL-1.5K	S-N10	2	2
	2.2	FR-V520-2.2K	30AF 20A	30AF 15A	FR-BAL-2.2K	FR-BEL-2.2K	S-N10	2	2
	3.7	FR-V520-3.7K	30AF 30A	30AF 30A	FR-BAL-3.7K	FR-BEL-3.7K	S-N20/N21	3.5	3.5
	5.5	FR-V520-5.5K	50AF 50A	50AF 40A	FR-BAL-5.5K	FR-BEL-5.5K	S-N25	5.5	5.5
	7.5	FR-V520-7.5K	100AF 60A	50AF 50A	FR-BAL-7.5K	FR-BEL-7.5K	S-N35	14	8
	11	FR-V520-11K	100AF 75A	100AF 75A	FR-BAL-11K	FR-BEL-11K	S-N50	14	14
	15	FR-V520-15K	225AF 125A	100AF 100A	FR-BAL-15K	FR-BEL-15K	S-N65	22	22
	18.5	FR-V520-18.5K	225AF 150A	225AF 125A	FR-BAL-22K	FR-BEL-18.5K	S-N80	38	38
	22	FR-V520-22K	225AF 175A	225AF 150A	FR-BAL-22K	FR-BEL-22K	S-N95	38	38
	30	FR-V520-30K	225AF 225A	225AF 175A	FR-BAL-30K	FR-BEL-30K	S-N125	60	60
	37	FR-V520-37K	400AF 250A	225AF 225A	FR-BAL-37K	FR-BEL-37K	S-N150	100	100
	45	FR-V520-45K	400AF 300A	400AF 300A	FR-BAL-45K	FR-BEL-45K	S-N180	100	100
	55	FR-V520-55K	400AF 400A	400AF 350A	FR-BAL-55K	FR-BEL-55K	S-N220	150	150
400V class	1.5	FR-V540-1.5K	30AF 10A	30AF 10A	FR-BAL-H1.5K	FR-BEL-H1.5K	S-N10	2	2
	2.2	FR-V540-2.2K	30AF 15A	30AF 10A	FR-BAL-H2.2K	FR-BEL-H2.2K	S-N10	2	2
	3.7	FR-V540-3.7K	30AF 20A	30AF 15A	FR-BAL-H3.7K	FR-BEL-H3.7K	S-N20/N21	2	2
	5.5	FR-V540-5.5K	30AF 30A	30AF 20A	FR-BAL-H5.5K	FR-BEL-H5.5K	S-N20/N21	3.5	2
	7.5	FR-V540-7.5K	30AF 30A	30AF 30A	FR-BAL-H7.5K	FR-BEL-H7.5K	S-N20/N21	3.5	3.5
	11	FR-V540-11K	50AF 50A	50AF 40A	FR-BAL-H11K	FR-BEL-H11K	S-N20/N21 (S-N25)	5.5	5.5
	15	FR-V540-15K	100AF 60A	50AF 50A	FR-BAL-H15K	FR-BEL-H15K	S-N25 (S-N35)	14	8
	18.5	FR-V540-18.5K	100AF 75A	100AF 60A	FR-BAL-H22K	FR-BEL-H18.5K	S-N35 (S-N50)	14	8
	22	FR-V540-22K	100AF 100A	100AF 75A	FR-BAL-H22K	FR-BEL-H22K	S-N50	22	14
	30	FR-V540-30K	225AF 125A	100AF 100A	FR-BAL-H30K	FR-BEL-H30K	S-N65	22	22
	37	FR-V540-37K	225AF 150A	225AF 125A	FR-BAL-H37K	FR-BEL-H37K	S-N80	38	22
	45	FR-V540-45K	225AF 175A	225AF 150A	FR-BAL-H45K	FR-BEL-H45K	S-N80 (S-N95)	38	38
	55	FR-V540-55K	225AF 200A	225AF 175A	FR-BAL-H55K	FR-BEL-H55K	S-N125	60	60

Note
1. Select the NFB type according to the power capacity.
2. Select a UL or cUL certified breaker when using in the United States or Canada.
3. The wire sizes are for a wiring length of 20m.

Selecting the rated sensitivity current for the earth leakage breaker

When using an earth leakage breaker (ELB) for the inverter circuit, select the rated sensitivity current as follows regardless of the PWM carrier frequency.

- For harmonic/surge compatible model
  Rated sensitivity current
  IΔn≧10 x (Ig1+Ign+Ig2+Igm)
- For general model
  Rated sensitivity current
  IΔn≧10 x {Ig1+Ign+3 x (Ig2+Igm)}

Ig1,Ig2 : Leakage current during commercial power operation of wire path
Ign* : Leakage current of noise filter on inverter input side
Igm : Leakage current during commercial power operation of motor

<Example>

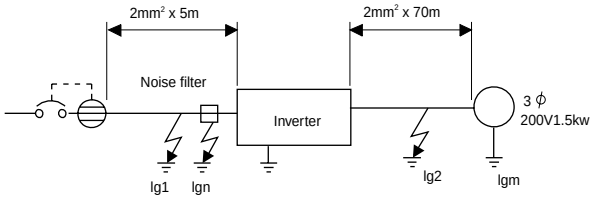

Example of leakage current per 1km during commercial power operation of wire path when CV cable is laid in metal conduit (200V 60Hz)

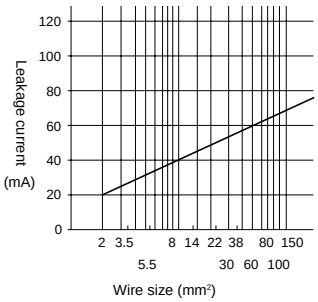

Example of leakage current during commercial power operation of a 3-phase induction motor (200V 60Hz)

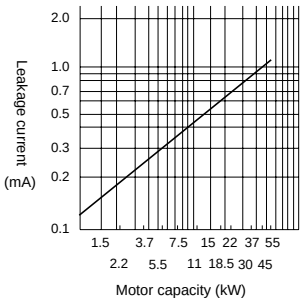

Note
1. Install NV on the primary side (power side) of the inverter.
2. When using connection neutral point grounding, the sensitivity current will worsen with respect to the ground fault on the inverter's secondary side. Thus, use Class C protective grounding (10Ω or less) for the load devices.
3. When the breaker is installed on the secondary side of the inverter, unnecessary operations may occur due to higher harmonics even when the effective value is less than the rating. In this case, the eddy current and hysteresis loss will increase and cause the temperature to rise. Thus, do not install on the secondary side.
4. General products refer to the following models. BV-C1 type, BC-V type, NVB type, NV-L type, NV-G2N type, NV-G3N type, NV-2F type, earth leakage relay (excluding NV-ZH), single-phase 3-neutral conductor, NV with phase failure protection. The other models are higher harmonic/surge compataible products. NV-C, NV-S, MN series, NV-30FA, NV-50FA, BV-C2, earth leakage alarm breaker, NV-ZH

* Pay attention to the leakage current value of the noise filter installed on the inverter's input side.

	For harmonic/surge compatible model	For general model
Leakage current Ig1 (mA)	$20\times\frac{5m}{1000m}=0.10$	
Leakage current Ign (mA)	0 (without noise filter)	
Leakage current Ig2 (mA)	$20\times\frac{70m}{1000m}=1.40$	
Motor leakage current Igm (mA)	0.14	
Total leakage current (mA)	1.66	4.78
Rated sensitivity current (mA) (≧Ig x 10)	30	100

List of options

	Name	Type	Details	Applicable inverter
Built-in type dedicated options (note 5) (note 6)	Expanded input thermistor interface	FR-V5AX	• Any six out of 25 types of input signals can be selected and contact input. • Highly accurate operation is possible by using the high resolution analog input (16-bit). • When using the motor with thermistor, the motor temperature can be detected by the thermistor, and the generated torque's temperature fluctuation reduced.	Common for all models
	Expanded output pulse division output	FR-V5AY	• Three out of 37 types of output signals are selected and open collector output to the inverter. • The pulse train input by the inverter can be divided and output.	
	Position control	FR-V5AP	• By inputting a pulse train from an external source, positioning can be controlled. The Mitsubishi PLC (positioning unit) can also be connected.	
	Machine orientation	FR-V5AM	• By using in combination with the position detector (PLG) installed on the machine's spindle, the spindle can be stopped at a set position (orientation function).	
	Trace card	T-TRC50	• By mounting this card on the inverter, the various data (output current, etc.) sampled can be saved in the memory.	
	16-bit digital input	FR-V5AH	• This is an input interface used to set the inverter speed with a high accuracy using a 4-digit BCD or 16-bit binary code signal from an external source.	
	SSCNET	FR-V5NS	• The inverter can be run and monitored and the parameter set from the motion controller.	
	Ethernet	FR-V5NE	• All operations from inverter startup to maintenance are supported.	
	12-bit digital input	FR-A5AX	• This is an input interface used to set the inverter speed with a high accuracy using a 3-digit BCD or 12-bit binary code signal from an external source. • The gain and offset can also be adjusted.	
	Digital output	FR-A5AY	• Seven out of 37 types of output signals provided as a standard in the inverter can be randomly selected and output from the open collector.	
	Expanded analog output		• 18 types of signals, such as rotation speed, output voltage and output current, which can be monitored with terminals DA1 and DA2 are expanded and output. • A 20mADC or 5VDC (10V) meter can be connected.	
	Relay output	FR-A5AR	• Three out of 37 types of output signals provided as a standard in the inverter can be randomly selected and output from the relay contact.	
	Orientation	FR-A5AP	• By using in combination with the position detector (PLG) installed on the machine's spindle, the spindle can be stopped at a set position (orientation function).	
	Pulse train input		• The speed command to the inverter can be input as pulse train signals.	
	Computer link	FR-A5NR	• When connected with a computer such as a personal computer or FA controller by a communication cable, the inverter can be operated and monitored and the parameters can be changed with user programs in the computer.	
	Relay output		• One of the output signals provided as a standard in the inverter can be randomly selected and output as a relay contact.	
	Profibus DP	FR-A5NPA	• The inverter can be operated and monitored and the parameters can be changed from a computer or PLC.	
	DeviceNet TM	FR-A5ND		
	CC-Link	FR-A5NC		
Standalone type options	Parameter unit (8-language)	FR-PU04V	Interactive parameter unit with LCD display (Compatible with Japanese, English, German, French, Spanish, Italian, Swedish and Finnish)	Common for all models
	Parameter unit connection cable	FR-CB2□□ (Note 2)	Cable for connecting operation panel and parameter unit	
	PLG cable (for dedicated motor)	FR-V5CBL□□ (Note 2)	Cable for connecting inverter and dedicated motor (SF-V5R) PLG, available in 5m, 15m and 30m lengths.	
	SSCNET connection cable	FR-V5NSCBL□□ (Note 2)	Cable to connect inverter and Q172CPU, or inverter to inverter. Cables are available in 0.5m, 1m, 5m, 10m or 20m lengths.	
	Heat sink protrusion attachment	FR-A5CN□□ (Note 2)	The inverter heat sink section can be protruded from the back of the control panel.	Compatible with 1.5 to 55k capacities
	Totally enclosed structure attachment	FR-A5CV□□ (Note 2)	This enables compliance with the totally enclosed structure specifications (IP40).	Compatible with 1.5 to 15k capacities
	Wire conduit connection attachment	FR-A5FN□□ (Note 2)	The wire conduit can be directly connected. This enables compliance to IP20.	Compatible with 18.5 to 55k capacities
	Installation adaptor	FR-A5AT□□ (Note 2)	Attachment for installing on the FREQROL-V500 Series using the FREQROL-V200 <EXCELLENT> installation holes.	Compatible with 1.5 to 7.5k, 15k capacities
	High-frequency braking resistor	FR-ABR□□ (Note 1, 2)	Used for improving braking performance of brakes built into inverter.	Compatible with 1.5 to 15k capacities
	Power factor improving DC reactor	FR-BEL□□ (Note 1, 2)	Used for improving inverter input power factor (total power factor approx. 95%) and for balancing power supply	Compatible with 1.5 to 55k capacities
	Power factor improving AC reactor	FR-BAL□□ (Note 1, 2)	Used for improving inverter input power factor (total power factor approx. 95%) and for balancing power supply	Compatible with 1.5 to 55k capacities
	Radio noise filter	FR-BIF□□ (Note 1, 2)	Used to reduce radio noise.	Common for all models
	Line noise filter	FR-BSF01	Used to reduce line noise (applicable for 3.7kW or smaller capacities)	
		FR-BLF	Used to reduce line noise	
	BU type brake unit	BU-1500~15K, H7.5K~H30K	Used for improving inverter braking performance (for high inertia loads or negative loads)	Compatible with capacities
	Brake unit	FR-BU-15K to 55K, H15K~H55K	Use the brake unit and resistor unit as a set	
	Resistor unit	FR-BR-15K to 55K, H15K~H55K	Used for improving inverter braking performance (for high inertia loads or negative loads)	
	Regenerative common converter	FR-CV-7.5K(-AT) to 55K H7.5K(-AT)~H55K(Note 7)	High-function unit that regenerates the braking energy generated at the motor into power with a common converter method.	
	Standalone reactor dedicated for FR-CV	FR-CVL-7.5K to 55K, H7.5K~H55K	Power balancing reactor for FR-CV	
	High-power factor converter	FR-HC-7.5K to 55K, H7.5K~H55K	The high-power factor converter allows the converter section to alter the input current waveform into a sine wave and greatly reduce the higher harmonics. (used in combination with the standard accessories.)	
FR Series operation and setting box (Note 4)	Operation box with frequency meter	FR-AX	For independent operation, and provided with frequency meter, frequency setter and start switch.	Common for all models
	Sequential setting and operation box (Note 9)	FR-AL	For sequential operation (1.5VA) with external signals (0 to 5VDC, 0 to 10V) (Note 3)	
	3-speed setting and operation box (Note 9)	FR-AT	For 3-speed (high, medium, low) changeover operation (5VA) (Note 3)	
	Remote setting box (Note 4)	FR-FK	For remote operation. Operation is possible from remote locations. (5VA) (Note 3)	
	Ratio setting box (Note 4)	FR-FH	For ratio operation. Ratios for up to five inverters can be set. (3VA) (Note 3)	
	Tracking setting box (Note 4)	FR-FP	For tracking operation using speed-designated generator signals. (2VA) (Note 3)	
	Main speed setting ox (Note 4)	FR-FG	Main speed setting unit for parallel operation of multiple inverters (up to 35 units) (5VA) (Note 3)	
	Inclination signal box (Note 4)	FR-FC	For soft start/stop. Acceleration/deceleration during parallel operation possible. (3VA) (Note 3)	
	Displacement detection box (Note 4)	FR-FD	For even speed operation. Use in combination with displacement detector and synchronizer. (5VA) (Note 3)	
	Pre-amplifier box (Note 4)	FR-FA	Use as A/V converter, and operation amplifier. (3CA) (Note 3)	
Miscellaneous	Speed-designated generator	QVAH-10	For tracking operation. 70/35VAC 500Hz (at 2500r/min)	
	Displacement detector	YVGC-500W-NS	For even speed operation (mechanical displacement detection). Output 90VAC/90°	
	Frequency setter	WA2W 1kΩ	For speed setting. Coil type 2W 1kW B characteristics.	
	Inverter setup software	FR-SW1-SETUP-WE	Supports inverter from startup to maintenance.	

Note
1. □□ indicates the capacity.
2. □□ indicates the value.
3. Rated power consumption
4. FR-F□ Series operation and setting box power specifications 200VAC 50Hz, 200V/220VAC 60Hz, 115VAC 60Hz
5. Up to three built-in options can be mounted simultaneously. (Only one of the same options can be mounted. Only one communication option can be mounted.)
6. When the option wiring cover is removed and the built-in option is mounted, the structure will be the open type (IP00).
7. -AT indicates the inner panel installation dimensions. When not indicated, this is the heat sink protrusion type. The 37k and larger capacity can be installed in any orientation by changing the position of the installation legs. There is no -AT.
8. "H" is added for the 400V Class models.
9. The power specifications for the FR-A□ Series operation box are 200VAC 50Hz, and 200/220VAC 60Hz.

Explanation of standalone options

FR-HC type high-power factor converter

- Higher harmonics in the power supply are greatly suppressed, and the equivalence capacity conversion coefficient K5=0 in the "Specific consumer higher harmonics suppression guidelines" is realized.
- Input current waveforms are improved to sine waves.
- Input capacity is reduced by improving input power factor.
- Power regeneration function is provided as a standard.
- Common converter type operation with several inverters connected is possible.

■Dimensions (Unit: mm)

Voltage	Capacity	High-power factor converter FR-HC			Reactor 1 FR-HCL01			Reactor 2 FR-HCL02			External box FR-HCB		
		W	H	D	W	H	D	W	H	D	W	H	D
200V	7.5K	220	300	190	160	155	100	240	230	160	190	320	165
	15K	250	400	190	190	205	130	260	270	170			
	30K	340	550	195	220	230	170	340	320	180	270	450	203
	55K	480	700	250	210	260	225	430	470	360			
400V	7.5K	220	300	190	160	150	100	240	220	160	190	320	165
	15K	250	400	190	190	195	130	260	260	170			
	30K	340	550	195	220	215	140	340	310	180			
	55K	480	700	250	280	255	190	400	380	285	270	450	203

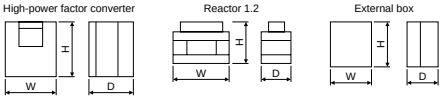

Note
- When connecting an inverter having a capacity smaller than the applicable range, use as a common converter is possible. However, the current higher harmonic suppression effect will drop.
- Make sure that at least one inverter with a capacity more than half of the high-power factor converter is connected. If the total of capacity of the connected converters is less than half of the high power factor converter, use as a common converter and regeneration converter is possible. However, the harmonic suppression effect will be reduced.
- When the high-power factor converter FR-HC is ordered, the reactor 1FR-HCL01, reactor 2FR-HCL02, and external box FR-HCB will be enclosed as a standard.

■Specification

Type FR-HC-□□		200V class				400V class			
		7.5K	15K	30K	55K	7.5K	15K	30K	55K
Applicable inverter capacity (Note)		3.7kW~7.5kW	7.5kW~15kW	15kW~30kW	30kW~55kW	3.7kW~7.5kW	7.5kW~15kW	15kW~30kW	30kW~55kW
Rated input voltage and frequency		3-phase 200V~220V 50Hz 200V~230V 60Hz				3-phase 380V~460V			
Rated input current (A)		33	61	115	215	17	31	57	110
Approx weight	Unit (kg)	8	15	29	70	9	16	35	72
	Accessories (reactor 1, 2, external box) total (kg)	20.8	31.2	57.5	96.6	23.7	32.4	51.8	92.4

FR-CV type power regeneration common converter

- 100% continuous regeneration is possible allowing use for continuous regeneration operation. (Maximum 150% torque 60s)
- Multiple inverters can be connected for common converter operation.
- The heat generating section can be protruded from the back of the storage panel, allowing the heat generated from the converter to be released to outside of the storage panel.

■ Heat sink protrusion type

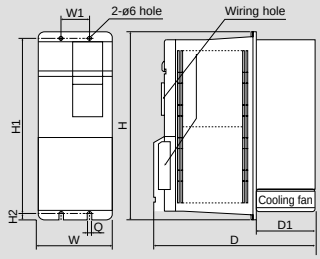

■ Inside panel installation type

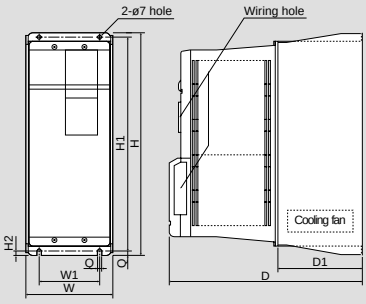

■ Dedicated standalone reactor

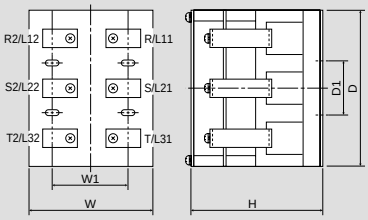

Note The designated standalone reactor is required.

Capacity	W	W1	D	D1	H	H1	H2	Q
7.5K/11K	90	—	303	103	300	280	10	6
15K H7.5K/H11K/H15K	120	—	305	105	300	280	10	6
22K/30K	150	60	322	122	380	360	10	6
H22K/H30K	150	60	305	105	380	360	10	6
37K/55K H37K/H55K	400	310	250	135	620	590	15	10

Capacity	W	W1	D	D1	H	H1	H2	Q
7.5K/11K	110	60	315	115	330	314	8	6
15K H7.5K/H11K/H15K	130	90	320	120	330	314	8	6
22K/30K H22K/H30K	160	120	302	122	410	396	7	7

Capacity	W	W1	D	D1	H
7.5K	130	82	165	55	155 or less
11K	130	75	165	55	155 or less
15K	130	105	165	55	155 or less
22K	140	110	165	55	155 or less
30K	160	120	215	70	155 or less
37K	320	120	220	—	155 or less
55K	335	135	250	—	155 or less
H7.5K	135	88	220	200	200 or less
H11K	135	98	220	200	200 or less
H15K	135	98	220	200	205 or less
H22K	150	113	220	200	215 or less
H30K	185	125	245	225	220 or less
H37K	230	125	245	225	265 or less
H55K	230	138	290	270	280 or less

Note
1. The actual appearance may differ according to the capacity.
   When using the vector inverter, select a one rank higher capacity.
   Example) Select FR-CV-11K when using the FR-V500-7.5K inverter.
2. The FR-CV-H7.5-AT does not have a cooling fan.
3. Refer to page 32 for details on selecting the FR-CV.

BU type brake unit, discharge resistor (Always use as a set)

●The brake unit is an option for optimizing the inverter's regenerative braking performance.

Brake unit selection table

Power voltage	Motor (kW) / Braking torque	1.5	2.2	3.7	5.5	7.5	11	15	18.5	22	30	37	45	55
200V class	50%30s	BU-1500	BU-3700		BU-7.5K		BU-15K		2xBU-15K			3xBU-15K		4xBU-15K
	100%30s	BU-3700	BU-7.5K		BU-15K		2xBU-15K		3xBU-15K		4xBU-15K	5xBU-15K	6xBU-15K	7xBU-15K
400V class	50%30s	*	BU-H7.5K				BU-H15K		BU-H30K			2xBU-H30K		
	100%30s	*	BU-H7.5K		BU-H15K		BU-H30K		2xBU-H30K			3xBU-H30K		4xBU-H30K

* The 400V Class 1.5V and smaller inverter cannot be used with the brake unit. Use a 2.2K or larger inverter with the brake unit.

Brake unit and discharge resistor combination

Brake unit	Discharge resistor	Brake resistor type	Wire size (P, N)
BU-1500	300W 50Ω one unit	GZG300W-50Ω	2mm²
BU-3700	300W 10Ω three units in parallel	GRZG200-10Ω	2mm²
BU-7.5K	450W 5Ω four units in parallel	GRZG300-5Ω	3.5mm²
BU-15K	600W 2Ω six units in parallel	GRZG400-2Ω	3.5mm²
BU-H7.5K	300W 10Ω six units in parallel	GRZG200-10Ω	2mm²
BU-H15K	450W 5Ω eight units in parallel	GRZG300-5Ω	3.5mm²
BU-H30K	600W 2Ω twelve units in parallel	GRZG400-2Ω	3.5mm²

* Contact Mitsubishi for details on the outline dimensions drawings and precautions.

FR-BU type brake unit and FR-BR type resistor unit (Always use as a set)

●The brake unit is an option for optimizing the inverter's regenerative braking performance.

Brake unit selection table

●Short-time rating %ED at 100% braking torque

Motor capacity			5.5kW	7.5kW	11kW	15kW	18.5kW	22kW	30kW	37kW	45kW	55kW
inverter		200V	5.5K	7.5K	11K	15K	18.5K	22K	30K	37K	45K	55K
		400V	5.5K	7.5K	11K	15K	18.5K	22K	30K	37K	45K	55K
Brake unit	200V	FR-BU-15K	%ED	80	40	15	10	—	—	—	—	—
		FR-BU-30K	%ED	—	—	65	30	25	15	10	—	—
		FR-BU-55K	%ED	—	—	—	—	90	60	30	20	15	10
	400V	FR-BU-H15K	%ED	80	40	15	10	—	—	—	—	—
		FR-BU-H30K	%ED	—	—	65	30	25	15	10	—	—
		FR-BU-H55K	%ED	—	—	—	—	90	60	30	20	15	10

●Short-time rating control torque (%) at 10% ED 15S

Motor capacity			5.5kW	7.5kW	11kW	15kW	18.5kW	22kW	30kW	37kW	45kW	55kW
inverter		200V	5.5K	7.5K	11K	15K	18.5K	22K	30K	37K	45K	55K
		400V	5.5K	7.5K	11K	15K	18.5K	22K	30K	37K	45K	55K
Brake unit	200V	FR-BU-15K	Braking torque (%)	280	200	120	100	80	70	—	—	—	—
		FR-BU-30K	Braking torque (%)	—	—	260	180	160	130	100	80	70	—
		FR-BU-55K	Braking torque (%)	—	—	—	—	300	250	180	150	120	100
	400V	FR-BU-H15K	Braking torque (%)	280	200	120	100	80	70	—	—	—	—
		FR-BU-H30K	Braking torque (%)	—	—	260	180	160	130	100	80	70	—
		FR-BU-H55K	Braking torque (%)	—	—	—	—	300	250	180	150	120	100

Brake unit and resistor unit combination

Brake unit type		Resistor unit type	Electric wire
200V	FR-BU-15K	FR-BR-15K	3.5mm²
	FR-BU-30K	FR-BR-30K	5.5mm²
	FR-BU-55K	FR-BR-55K	14mm²
400V	FR-BU-H15K	FR-BR-H15K	3.5mm²
	FR-BU-H30K	FR-BR-H30K	3.5mm²
	FR-BU-H55K	FR-BR-H55K	5.5mm²

* Contact Mitsubishi for details on the dimensions and precautions.

Note
1. The resistor unit temperature can rise up to 100°C. Thus, use heat resistant wires (glass mesh wires, etc.) or cover the wire with silicon tubing.
2. Connect the terminals P/+ and N/- with the inverter terminals P/+ and N/-. The brake unit will not function correctly if the terminals are incorrectly connected.
3. Keep the wire between the inverter and brake unit and between the resistor unit and brake unit as short as possible. Use as twisted wires if the wire is longer than 5m. (Keep the length under 10m even when using twisted wires.) Use wires having the recommended size or larger.
4. When using the FR-BU with a 5.5K or smaller inverter capacity, always remove the jumper across the terminals PR-PX.

Brake resistor

●Dimension

Brake resistor type		Tolerable brake usage duty (Note 3)	Outline dimensions W	D	H	L	Resistance value (Ω)	Approx. weight (kg)
200V class	FR-ABR-2.2K (Note 1)	10%	240	50	25	500	60	0.5
	FR-ABR-3.7K	10%	215	60	30	500	40	0.8
	FR-ABR-5.5K	10%	335	60	30	500	25	1.3
	FR-ABR-7.5K	10%	400	80	40	500	20	2.2
	FR-ABR-11K	6%	400	100	50	700	13	3.4
	FR-ABR-15K (Note 5)	6%	300	100	50	700	18/2	2.2
400V class	FR-ABR-H1.5K	10%	215	40	20	500	350	0.4
	FR-ABR-H2.2K	10%	240	50	25	500	250	0.5
	FR-ABR-H3.7K	10%	215	60	30	500	150	0.8
	FR-ABR-H5.5K	10%	335	60	30	500	110	1.3
	FR-ABR-H7.5K	10%	400	80	40	500	75	2.2
	FR-ABR-H11K	6%	400	100	50	700	52	3.4
	FR-ABR-H15K (Note 5)	6%	300	100	50	700	18x2	2.2

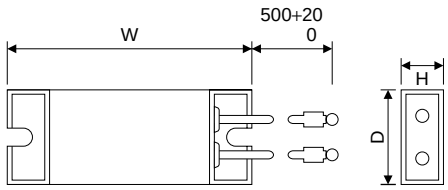

Note
1. This is common for the 1.5K and 2.2K capacities.
2. When using the FR-ABR type brake resistor, remove the jumper across terminals PR-PX in the 5.5k and smaller inverter. The internal brake resistor will overheat if the jumper is not removed.
3. Set the regenerative brake usage duty to less than the tolerable brake usage duty shown above.
4. Depending on the operation frequency, the brake resistor's temperature could rise to above 300°C. Thus, pay special attention to the installation and heat dissipation measures.
5. The FR-ABR-15K unit is used with two units connected in parallel. FR-ABR-H15K is used with two units connected in series. The outline dimensions in the above table are for one resistor unit.

Radio noise filter <FR-BIF (-H)>

● This noise filter is used to suppress radio noise radiated from the inverter's power supply.

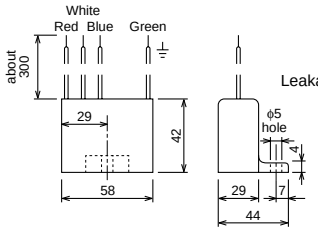

Leakage current: Approx. 4mA (400V Class is approx. 8mA)

(unit: mm)

Note
1. This radio filter cannot be connected to the inverter's output side.
2. Keep the wire as short as possible, and connect to the inverter's terminal block.
3. When using the radio noise filter for a circuit separate from the inverter's control power, always connect to the primary side of the MC. If connected to the secondary side, an undervoltage alarm (E, UVT) will occur when the MC turns ON and OFF.
4. The listed leakage current is for one phase of a 3-phase 3-wire 人connection type power supply.

Line noise filter <FR-BSF01, FR-BLF>

● This noise filter is used to suppress the radio noise and line noise radiated from the inverter's power supply or output side.

FR-BSF01

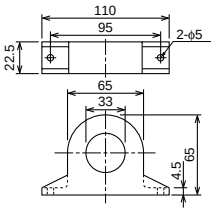

FR-BLF

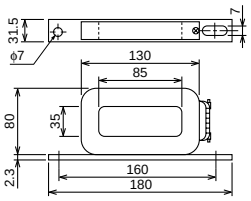

(unit: mm)

Note
1. Pass and wind each phase wire three winds (4T) or more in the same direction. (The effect will increase with each wind.)
2. If the wire is thick and cannot be wound, use four or more filters for the series, and pass the wire through each phase in the same direction.
3. The filter can be handled on the output side in the same manner as the input side. When using on the output side, pass the wire through three winds (4T) or less.
4. Use the FR-BSF01 for the 3.7K or smaller capacity. A thick wire (38mm^2 or larger) cannot be used. If required, use the FR-BLF.

Power factor improvement DC reactor <FR-BEL-(H)□□K>

● The power factor improvement DC reactor FR-BEL(-H) is used to improve the inverter's input current waveform efficiency, so the power capacity can be decreased. This reactor is also effective in reducing the higher harmonic current on the input side. The loss is smaller than the AC reactor FR-BAL, so the unit can be downsized. The input power factor is improved to approx. 95%.

●Outline dimension drawing (unit: mm)

	Type	W	D	H	Weight (kg)		Type	W	D	H	Weight (kg)
200V	1.5K	130	65	110	1.1	400V	H1.5K	130	63	89	0.9
	2.2K	130	65	110	1.2		H2.2K	130	63	101	1.1
	3.7K	150	75	102	1.7		H.3.7K	150	75	102	1.7
	5.5K	150	75	126	2.2		H5.5K	150	75	124	2.2
	7.5K	150	75	126	2.3		H7.5K	150	75	124	2.3
	11K	170	93	132	3.1		H11K	170	93	132	3.1
	15K	170	93	170	3.8		H15K	170	93	160	3.7
	18.5K	185	94	184	5.1		H18.5K	185	94	173	4.8
	22K	185	119	182	5.4		H22K	185	119	171	5.0
	30K	185	119	201	6.7		H30K	185	119	189	6.7
	37K	195	136	215	7.4		H37K	195	136	199	7.0
	45K	195	136	215	8.0		H45K	195	138	219	8.6
	55K	195	136	246	9.8		H55K	195	138	219	9.0

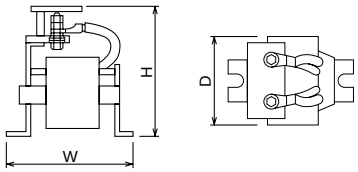

Note
1. Always remove the jumper across the inverter terminals P-P1.
   (The power factor improvement effect will not be attained unless the jumper is removed.)
2. Keep the distance of the wire with the inverter to 5m or less.
3. Use a wire size equivalent to or larger than the power cable (R, S, T).
4. Select according to the motor capacity.
   (If the inverter capacity is larger than the motor capacity, select according to the motor capacity.)

Power factor improvement AC reactor <FR-BAL-(H)□□K>

● The power factor improvement AC reactor FR-BAL (-H) improves the inverter's input current waveform efficiency, and improves the power factor. Thus, the power capacity can be reduced. This reactor is also effective in reducing the higher harmonic current on the input side. The input power factor is improved to approx. 90%.

●Outline dimension drawing (unit: mm)

	Type	W	D	H	Weight (kg)		Type	W	D	H	Weight (kg)
200V	1.5K	160	71	140	3.7	400V	H1.5K	160	87	140	4.7
	2.2K	160	91	140	5.6		H2.2K	160	91	140	4.8
	3.7K	220	90	192	8.5		H.3.7K	220	90	190	7.7
	5.5K	220	96	192	9.5		H5.5K	220	96	192	9.5
	7.5K	220	120	194	14.5		H7.5K	220	120	192	12
	11K	280	135	220	19		H11K	280	130	226	18.5
	15K	295	133	275	27		H15K	295	130	244	26
	22K	290	199	295	35		H22K	290	199	263	29
	30K	290	219	295	43		H30K	290	219	284	42.5
	37K	330	235	300	50		H37K	330	219	298	50
	45K	330	235	350	60		H45K	330	219	330	59
	55K	330	240	350	70		H55K	330	219	330	64

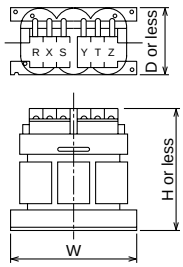

Note
1. Refer to the peripheral device selection table, and select according to the capacity of the motor being used.

Heat sink protrusion attachment <FR-A5CN>

Complying with small storage panels

When storing the inverter in a panel, the heat generated in the panel can be greatly reduced by protruding the heat radiation heat sink section of the inverter outside the panel.
This installation method is recommended when downsizing for a totally enclosed type storage panel.

Note
1. Prepare the optional fixing bracket FR-A5CN when installing. (Compatible models: 1.5K to 55K)
2. The height of the heat sink section will be higher than the FREQROL-V200 Series.

Inverter		Cooling fin protrusion attachment	
200V Class	400V Class	Type	Panel cut dimension drawing
FR-V520-1.5K/2.2K	FR-V540-1.5K/2.2K	FR-A5CN01	①
FR-V520-3.7K~7.5K	FR-V540-3.7K/5.5K	FR-A5CN02	②
FR-V520-11K/15K	FR-V540-7.5K~18.5K	FR-A5CN04	③
FR-V520-22K	FR-V540-22K	FR-A5CN05	④
FR-V520-30K/37K	FR-V540-30K/37K	FR-A5CN06	⑤
FR-V520-45K/55K	FR-V540-45K/55K	FR-A5CN07	⑥
FR-V520-18.5K	—	FR-A5CN08	⑦

Cut-out dimension drawing (when using FR-A5CN)

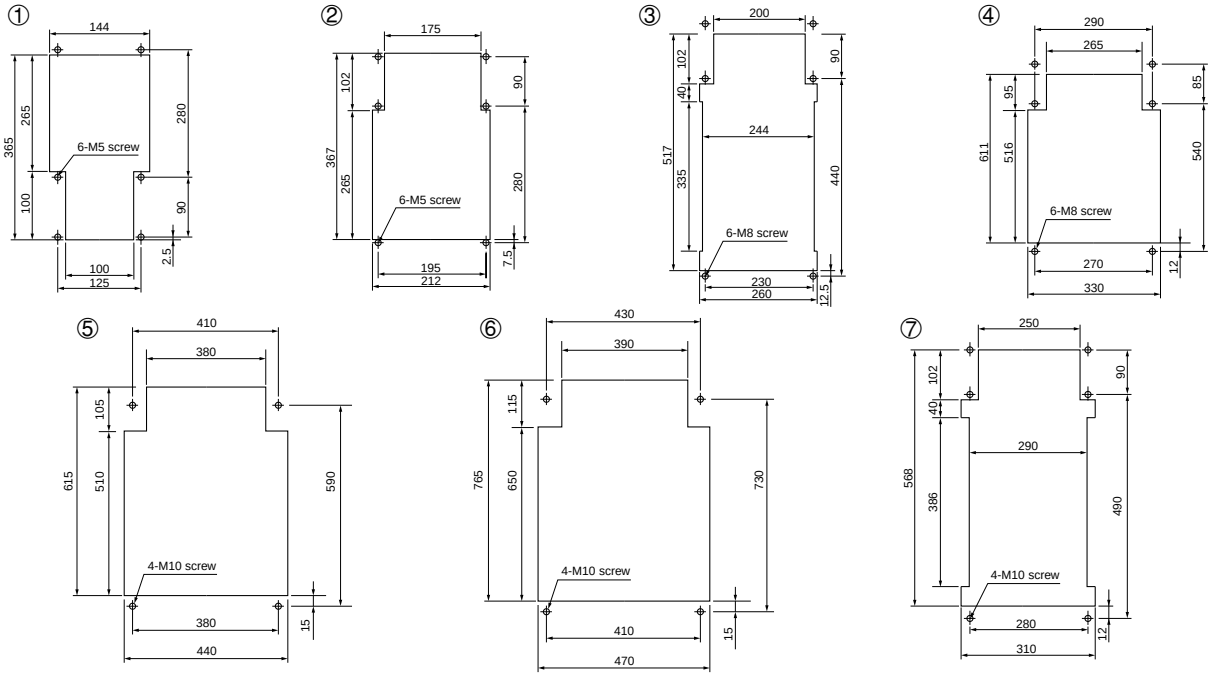

FREQROL-V200 Series Mounting Converter Attachment <FR-A5AT>

This product allows the mounting holes to be used when replacing the product.

● Use this attachment to mount the FREQROL-V500 Series using the FREQROL-V200 Series mounting holes.

Applicable inverter

Attachment type	Mountable models	
	FR-V520	FR-V540
FR-A5AT02	1.5K, 2.2K	1.5K, 2.2K
FR-A5AT03	3.7K, 5.5K, 7.5K	3.7K, 5.5K
FR-A5AT04	15K	15K, 18.5K

(unit: mm)

Type	W	W1	W2	H	H1	H2	C
FR-A5AT02	150	125	5	300	285	260	6
FR-A5AT03	220	195	6	300	285	265	6
FR-A5AT04	300	280	10	450	430	404	10

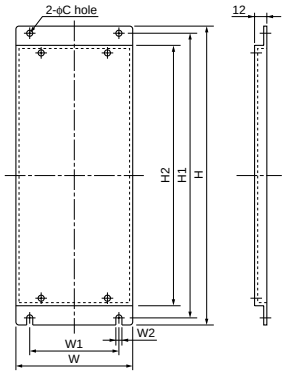

Totally enclosed structure specification attachment <FR-A5CV>

● By mounting this attachment in the slits on the left and right of the inverter, the specifications can be changed to the totally enclosed specifications (IP40).

Applicable inverter	Applicable attachment	
	FR-A5CV01	FR-A5CV02
FR-V520	1.5K~7.5K	11K/15K
FR-V540	1.5K~5.5K	7.5K~18.5K

Wire conduit connection attachment <FR-A5FN>

● This attachment allows the wire conduit to be connected directly to the inverter unit.

Applicable inverter	Applicable attachment				
	FR-A5FN01	FR-A5FN02	FR-A5FN03	FR-A5FN04	FR-A5FN05
FR-V520	22K	30K/37K	45K	18.5K	55K
FR-V540	22K	30K/37K	45K	—	55K

Dedicated cable options

Name (Type)	Specifications and structure, etc.
PLG cable	For dedicated motor FR-V5CBL□□

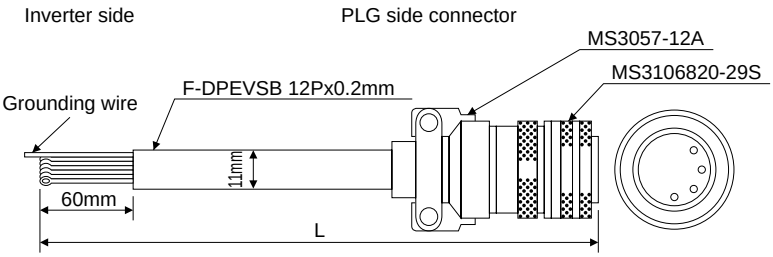

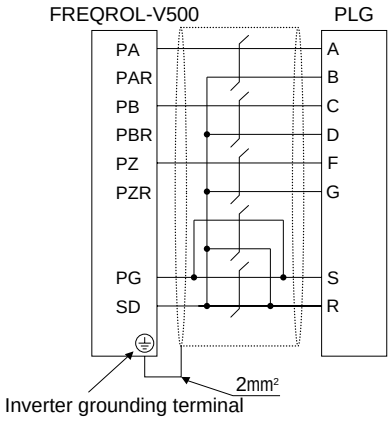

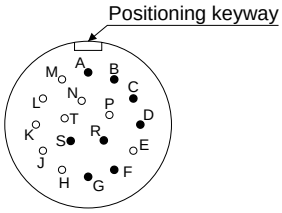

MS3106B20-29S
(view from wiring side)

Type	Length L (m)
FR-V5CBL5	5
FR-V5CBL15	15
FR-V5CBL30	30

Note
1. The crimp terminal size for the conventional cable option FR-VCBL/JCBL □□ is M3. This size cannot be used with the FREQROL-V500 Series. The crimp terminal size must be changed from M3 to M3.5.
2. Contact your nearest Mitsubishi sales office for details on using a cable 30m or longer.

Precautions for use and selection

Precautions for use

⚠For Maximum Safety

- Always read the instruction manual before use to use the equipment properly and safely.
- This product is not designed or manufactured to be used in equipment or systems in situations that can adversely affect or endanger human life.
- When considering this product for operation in special applications such as machinery or systems used in passenger transportation, medical, aerospace, nuclear energy, electric power, or submarine relay applications, please contact your nearest Mitsubishi sales representative.
- Although this product was manufactured under strict quality control conditions, it is strongly advised to install safety devices to prevent serious accidents when used in facilities where a breakdown of the product is likely to cause a serious accident.
- Do not use for loads other than 3-phase induction motors.

Operation

- When a magnetic contactor (MC) is installed on the primary side, do not start and stop operation frequently with this MC. Failure to observe this could lead to inverter faults.
- When a fault occurs in the inverter, the protection function will activate and the output will stop, but the motor will not stop immediately. Thus, if the machine or facility requires emergency stop, install a mechanical stopping and holding mechanism.
- It will take some time for the capacitor to discharge after the inverter power has been turned OFF. Before starting inspections, wait for at least 10 minutes after the power supply has been turned off, and then use a tester, etc., to confirm the voltage.

Wiring

- If the power is applied on the inverter's output terminals (U, V, W), the inverter section could be damaged. Thus, always check the wiring and sequence, and confirm that there is no incorrect wiring before turning the power ON.
- The terminals P/+, P1, PR, PX and N/- are for connecting dedicated options. Do not connect devices other than the dedicated options. Do not short circuit across the speed setting power terminal 10E and common terminal 5, across terminal PC and SD or across terminal PG and SD.

Installation

- Do not install the inverter in an environment containing suspended particles such as oil mist, cotton lint or dust, etc. Select a clean place or store the product in a "closed type" panel into which the suspended particles cannot enter. When storing the inverter in the panel, select the cooling method and panel dimensions so that the inverter's ambient temperature is within the tolerable temperature (refer to page 6 for the specification values). The panel can be downsized by protruding the inverter's heat generating section outside of the panel.
- Some sections of the inverter will reach high temperatures. Thus, do not install the inverter on flammable material, such as wood.
- Install the inverter vertically on a wall.

Power supply

- If the unit is installed directly below a large-capacity power supply (1000kVA or more, with wiring length of 10m or less), or where the phase advance capacitor switches, an excessive peak current may flow to the power input circuit causing damage to the inverter. In this case, be sure to install the optional FR-BEL or FR-BAL power factor improvement reactor.

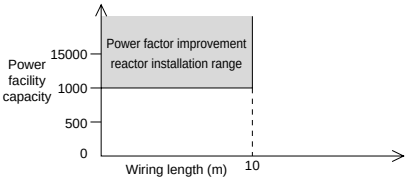

- If a surge voltage occurs in the power system, that surge energy could flow into the inverter and cause the inverter to stop with an overvoltage alarm. In this case, install the optional FR-BEL (or FR-BAL) power factor improvement reactor.

Setting

- When the parameter unit is installed, high-speed operation at up to 3600r/min is possible. Thus, incorrect settings can be extremely dangerous. Use the upper limit frequency setting function and set the upper limit. (As the default, the maximum frequency is set to 1500r/min for external input signal operation. The frequency is set to 1500r/min for PU operation.)
- The regenerative brake usage duty (Pr. 70) must not be set unless using the optional brake resistor. This function is used to protect the brake resistor from overheating. Thus, do not set a value exceeding the brake resistor's tolerable usage duty.
- The motor could overheat (thermal trip) if the DC braking operation voltage and operation time are set to be larger than factory settings.

Noise

When carrying out low-noise operation with the carrier frequency raised, the magnetic noise will tend to increase. Refer to the following countermeasures, and act accordingly. Depending on the installation state, the effect of noise may be apparent even during non-low noise operation (default state).

- The radio noise filter FR-BIF is effective against static noise in AM radio broadcasts.
- The line noise filter FR-BSF01, FR-BLF is effective against malfunctioning of the sensors.
- As a measure against induction noise from the inverter's power cable, separate the devices by 30cm (at least 10cm), and use twisted pair shield wires for the signal wires. Do not ground the shields, instead ground at one point on the signal's common side.

Higher harmonic suppression countermeasure guidelines

The higher harmonic current generated from the inverter flows to the incoming power point via the power transformer. Other consumers could be affected by this higher harmonic current that flows, so higher harmonic suppression countermeasure guidelines have been set. The "Higher Harmonic Suppression Guidelines for Household Appliances and General-purpose Products" apply for the 3.7kW and smaller capacities, and the "Higher Harmonic Suppression Guidelines for Specific Consumers" apply for the other capacities.

- The " Higher Harmonic Suppression Guidelines for Household Appliances and General-purpose Products" for 3.7kW and smaller capacities were set in September 1994 by the Ministry of International Trade and Industry's Agency (currently, Ministry of Economy, Trade and Industry (METI)). Restriction levels have been set in stages by the JEMA, following these guidelines. To comply with these standards, a power factor improvement reactor (FR-BEL or FR-BAL) must be connected to the inverter.
- "Higher Harmonic Suppression Guidelines for Specific Consumers"
  These guidelines set the upper limit of the higher harmonic current discharged from when specific consumers using high voltages or special high voltages newly install, expand or upgrade higher harmonic generating devices. Countermeasures must be taken when the specified upper limit is exceeded.

Precautions for using dedicated motors

- An encoder is installed, so do not apply impacts on the shaft end.
- The design life of the cooling fan is 20,000 hours.
  Do not use this product in an environment where oil mist, etc., could adhere.
- Always use with the designated inverter combination. Do not connect the motor directly to the commercial power supply.

Driving 400V Class motor with inverter

When driving the 400V Class motor with an inverter, a surge voltage caused by the wiring constants could be generated at the motor terminals. This voltage could cause the motor insulation to drop. Consider using the following measures in this case.

- Reinforcing the motor insulation
  Use a 400V Class motor with reinforced insulation.
  In actual use:
  1. Designate the "400V class reinforced insulation motor for inverter drive".
  2. Use the "inverter drive motor" for the dedicated motor, such as the constant torque motor or low vibration motor.

Precautions for making selections

Installation and selection of no-fuse breaker

Install a no-fuse breaker (NFB) on the incoming power side to protect the inverter's primary wiring. The NFB is selected according to the inverter's power side power factor (changes according to power voltage, output frequency and load), so refer to page 21. Note that the operation characteristics of the completely magnetic type NFB will change according to the higher harmonic current, so a larger capacity must be selected. Use a Mitsubishi higher harmonic and surge compatible product of the earth leakage current. When installing a no-fuse breaker on the inverter's secondary side, contact the manufacturer for details on making a selection.

Handling magnetic contactor on primary side

When operating with the external terminal (using terminal STF or STR), always install an MC on the primary side to prevent accidents when the inverter restarts automatically when power is recovered after an instantaneous power failure, etc. This will also ensure safety during maintenance work. Do not start and stop operation frequently with this MC. (The inverter's input circuit switching life is approx. 100,000 times.) When operating with the parameter unit, the operation will not restart automatically after the power is recovered, so operation cannot be started with the MC. Note that the operation can be stopped with the MC on the primary side, but the inverter's unique regenerative brakes will not function, and instead the operation will coast to a stop.
When connecting the optional brake resistor and carrying out cycle operation or operation under harsh conditions, the regenerative brake resistor could be damaged due to insufficient heating capacity in the brake discharge resistor or due to an excessive regenerative brake usage duty. Installation of a magnetic contactor on the primary side is recommended to prevent this. At this time, cut off the magnetic contactor when the inverter stops with an alarm or thermal relay such as an error output.

Handling of magnetic contactor on secondary side

Note that if a magnetic contactor is installed between the inverter and motor and the MC is turned ON/OFF during operation, a large rush current could flow and affect the motor.

Installation of thermal relay

The inverter has an electronic thermal protection function to protect the motor from overheating. However, when running several motors with one inverter or when running a multi-pole motor, install a thermal relay (OCR) between the inverter and motor. Set the inverter's electronic relay to OA. When setting the thermal relay, consider the current that leaks between the wires, by setting a value 0.1-times the current value if the motor rating plate indicates 50Hz, and 1.1-times the current value is the rating is 60Hz. (Refer to page 24.)

Secondary measuring instrument

If the wiring between the inverter and motor is long, the instruments or CT could heat up due to the current that leaks between the wires. Thus, select the devices with an allowance in the current rating. Use of the inverter's analog output function is recommended for measuring and displaying the inverter's output voltage or output current.

Power factor improvement capacitor

The power factor improvement capacitor and surge suppressor installed on the inverter's output side could overheat or be damaged due to the higher harmonics in the inverter output. Furthermore, the overcurrent protection could activate if an overcurrent flows to the inverter, so do not insert a capacitor or surge suppressor. Use a power factor improvement DC reactor to improve the power factor.

Wire size and wiring distance

If the wiring between the inverter and motor is long, select a thick wire so that the main circuit cable's voltage drop is 2% or less, especially when outputting low frequencies. (Refer to page 21 for examples of selecting a wire when the wiring distance is 20m.) If the wire is especially long, the overcurrent protection function could malfunction due to the charging current. Thus, make sure that the maximum wire length is 100m or less. When installing the operation panel (parameter unit) away from the inverter, use the recommended connection cable. When using remote operations with the analog signals, make sure that the control wire between the operation box or operation signal and inverter is 30m or less. Separate this wire away from the power distribution circuit (main circuit and relay sequence circuit) so that it is not affected by induction from other devices. When setting the speed with the external potentiometer instead of the parameter unit, use the following type of shield wire or twisted wire, and always connect the shield to terminal No. 5 instead of to the ground.

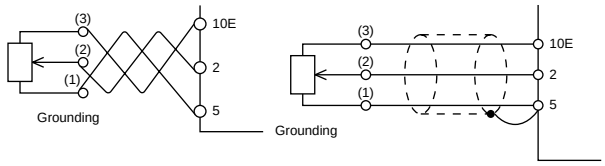

Grounding

When the inverter is run with low-noise, the leakage current will increase because of the high-speed switching compared to the non-low noise operation. Always ground the inverter and motor. Always use the inverter's grounding terminal to ground the inverter.

Selecting FR-CV

The capacity of the main circuit smoothing capacitor of the FREQROL-V500 vector inverter is larger than other general-purpose inverter models of the same capacity. Thus, substitute the inverter capacity as shown below when making a selection.

Actual capacity of FR-V500 [K]	1.5	2.2	3.7	5.5	7.5	11	15	18.5	22	30	37	45
FR-V500 replacement capacity when using in combination with FR-CV [K]	2.2	3.7	5.5	7.5	11	15	18.5	22	30	37	45	55

Selection example: When using FR-V520-7.5K and FR-V520-15K
FR-V520-7.5K
→ Substitute capacity with 11K, and select FR-CV
FR-V520-15K
→ Substitute capacity with 18.5K, and select FR-CV
11K + 18.5K = 29.5K
→ Select FR-CV-30K

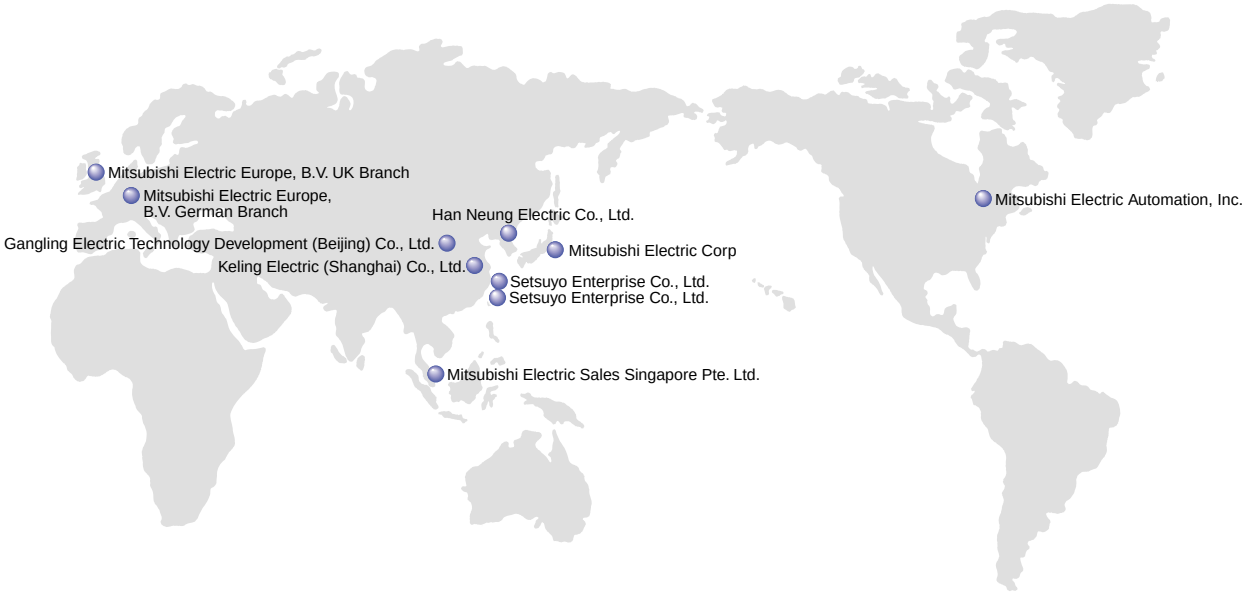

- Mitsubishi Electric Automation, Inc.
  500 Corporate Woods Parkway, Vernon Hills, IL 60061
  TEL. +1-847-478-2100 FAX. +1-847-478-0328

- Mitsubishi Electric Europe, B.V. UK Branch
  (Customer Technology Centre)
  Travellers Lane, Hatfield, Herts. AL10 8XB, UK
  TEL. +44-1707-276100 FAX. +44-1707-278992

- Mitsubishi Electric Europe, B.V. German Branch
  (Industrial Automation Division)
  Gothaer Strasse 8, D-40880 Ratingen, Germany
  TEL. +49-2102-486-204 FAX. +49-2102-486-717

- Mitsubishi Electric Sales Singapore Pte. Ltd.
  (Industrial Engineering Centre)
  307 Alexandra Road #05-01/02. Mitsubishi Electric Building Singapore. 159943
  TEL. +65-473-2308 FAX. +65-473-8944

- Setsuyo Enterprise Co., Ltd.
  6F. No.105, Wu Kung 3nd Rd, Wu-Ku Hsiang Taipei Hsien Taiwan R.O.C.
  TEL. +886-2-2299-2499 FAX. +886-2-2299-2509

- Setsuyo Enterprise Co., Ltd.
  7F-7, No.77, Zheng, Bei, 1st RD, Taichung, Taiwan, R.O.C.
  TEL. +886-4-258-1027 FAX. +886-4-252-0967

- Gangling Electric Technology Development (Beijing) Co., Ltd.
  Room 954, Office Building, New Century Hotel, No. 6 Southern Road, Capital Gym., Beijing 100044, China
  TEL. +86-10-6849-2077 FAX. +86-10-6849-2087

- Keling Electric (Shanghai) Co., Ltd.
  2F Block 5 Building Automation Instrumentation Plaza, 103 Cao Bao Rd., Shanghai 200233, China
  TEL. +86-21-6484-9360 FAX. +86-21-6484-9361

- Han Neung Electric Co., Ltd.
  Dong Seo Game Channel BLD. 2F 660-11 Deung Chon-Dong, Kang seo-ku, Seoul, 157-030, Korea
  TEL. +82-2-3663-0471 FAX. +82-2-3663-0475

Safety Warning

To ensure proper use of the products listed in this catalog,
please be sure to read the instruction manual prior to use.

MITSUBISHI ELECTRIC CORPORATION
HEAD OFFICE : MITSUBISHI DENKI BLDG., 2-2-3, MARUNOUCHI, CHIYODA-KU, TOKYO 100-8310, JAPAN
www.MitsubishiElectric.co.jp/melfansweb

L(NA)06037E-A(0303)MDOC